MODE
SET
CN1
IN
CN2
OUT
CN3
CN4
CHARGE
L1
L2
P
B
N
U
V
W
PE
NG100A EtherCAT
SERVO MOTOR DRIVER

catalogue

Chapter 1 Selection and installation 1
1.1 ..... DEMONSTRATION OF THE TYPE 1
1.2 ..... SPECIFICATION PARAMETERS 2
1.2.1 ..... Basic parameters of the model 2
1.2.2 ..... EtherCAT Communication technical specifications 2
1.2.3 ..... Electrical parameters of each model 5
1.3 ..... INTERFACE SPECIFICATION 6
1.4 ..... DRIVE INSTALLATION 7
1.4.1 ..... installation site 8
1.4.2 ..... ambient condition 8
1.4.3 ..... installation size 9
1.4.4 ..... Installation precautions 9
1.4.5 ..... landing 11
1.4.6 ..... Wiring requirements 11
Chapter 2 wiring 12
2.1 ..... SYSTEM WIRING DESCRIPTION 12
2.2 ..... SERVO-DRIVE PORT DEFINITION 16
2.3 ..... POWER TERMINAL DEFINITION AND WIRING INSTRUCTIONS 17
2.3.1 ..... Definition of the power supply and the motor terminals 17
2.3.2 ..... Card spring type terminal wiring method 17
2.3.3 ..... Example of the main circuit wiring 17
2.3.4 ..... Specification of the main loop cable 19

2.4 ..... REGENERATION RESISTANCE WIRING INSTRUCTIONS 20
2.4.1 ..... Regeneration resistance wiring 20
2.4.2 ..... Regeneration resistance specification 20
2.4.3 ..... Recculation of selection selection selection

2.5 ..... LOCK WIRING INSTRUCTIONS 20
2.6 ..... DESCRIPTION OF THE CN3-PORT WIRING FOR THE CONTROL SIGNAL 22
2.6.1 ..... Control signal CN3 port definition 22
2.6.2 ..... Digital quantity input wiring instructions 23
2.6.3 ..... Digital quantity output wiring description

2.7 ..... ENCODER TERMINAL DEFINITION AND WIRING DESCRIPTION 29
2.7.1 ..... Motor encoder 29
2.8 ..... COMMUNICATION TERMINAL DEFINITION 30
2.8.1 ..... Backstage debugging terminal 30
2.8.2 ..... EtherCAT Terminal 31
2.9 ..... GROUND AND ANTI-INTERFERENCE MEASURES 32
2.9.1 ..... Ground measures 32
2.9.2 ..... Anti-interference measures 33
2.9.3 ..... noise filter 34
2.9.4 ..... earth leakage circuit breaker 37
2.9.5 ..... Cable and wiring requirements 38
2.9.6 ..... Input / output magnetic loop selection 42
2.9.7 ..... Common EMC problem-solving recommendations 43

2.10 ..... OVERALL WIRING DIAGRAM 44
Chapter 3 commissioning test 45
3.1 ..... BASIC OPERATION SETTING 45
3.1.1 ..... Motor adjustment 45
3.1.2 ..... Lock setting 47
3.1.3 ..... Run direction selection 52
3.1.4 ..... Absolute value function 53
3.1.5 ..... Electronic gear ratio setting 55
3.1.6 ..... sequence chart
3.1.7 ..... move 56
3.1.8 ..... halt 57
3.2 ..... PANEL CONTROL OPERATION 61
3.2.1 ..... Panel introduction 61
3.2.2 ..... Panel point moving operation
3.3 ..... DriverStart Use it at the same time 63
3.3.1 ..... summary 63
3.3.2 ..... Java runtime environment Java 63
3.3.3 ..... Parameter management 64
3.3.4 ..... oscilloscope 66
3.3.5 ..... initialise 69
3.3.6 ..... pilot run 71
3.3.7 ..... harmonious 76
3.3.8 ..... troubleshooting 79

3.4 ..... EtherCAT Control of the operation 82
3.4.1 ..... Running status control 82
3.4.2 ..... PDO configure 89
3.4.3 ..... Run mode settings 91
3.4.4 ..... application function 144
Chapter 4 gain adjustment 150
4.1 ..... PURPOSE 150
4.2 ..... THE WHOLE WAY 151
4.2.1 ..... Mechanical load recognition 151
4.2.2 ..... Manual gain adjustment 154
4.2.3 ..... Gain switching 162
4.2.4 ..... automatic gain control 166
4.3 ..... VIBRATION ABATEMENT 169
4.3.1 ..... notch filter 169
4.3.2 ..... vibration abatement 170
4.4 ..... COMMON APPLICATION SCENARIOS 173
4.4.1 ..... Rolling bead wire bar load 173
4.4.2 ..... Synchronized with load 174
4.4.3 ..... Gear tooth load 175
4.4.4 ..... Used disk load 176
4.4.5 ..... Long cantilever load

Chapter 5 Fault and warning handling 177
5.1 ..... DISPLAY AND VIEW 177

5.2 ..... FAULT CODE LIST 178
5.3 ..... WARNING CODE LIST 180
5.4 ..... FAULT TREATMENT 181
5.5 ..... WARNING PROCESSING
5.6 ..... THE REDUCTION METHOD 188
Chapter 6 object dictionary ..... 错误！未定义书签。
6.1 ..... OBJECT GROUP 1000H ALLOCATION LIST
6.2 ..... OBJECT GROUP 2000H ALLOCATION LIST
6.3 ..... OBJECT GROUP 6000H DISTRIBUTION LIST
Chapter 7 appendix **200**
7.1 ..... DIDO FUNCTION DEFINITION 200
7.2 ..... THE SDO TRANSMISSION STOP CODE 204
7.3 ..... ADAPT TO THE TWINCAT OPERATION INSTRUCTIONS 204
7.3.1 ..... TwinCAT Point run 204
7.3.2 ..... TwinCAT3-PDO control operation 213
7.3.3 ..... Run examples of the various modes

1 Selection and installation

1.1 demonstration of the type

NG100A	-	E	R	5R5	S2
①		②	③	④	⑤

①：Serial number
NG100A Series

②：Product category
E：EtherCAT

③：Motor Type
R：Rotary servo motors

④：Rating

	001	R6	R8	R5	R6	012	014
Cont [A rms]	1.0A	1.6A	2.8A	5.5A	7.6A	12A	14.0A
Cont [P w]	100W	200W	400W	750W	1000W	1500W	2000W

⑤：Voltage class
S2：Single/Three phase 220V

1.2 Specification parameters

1.2.1 Basic parameters of the model

project			description
Basic specifications	control method		IGBT SVPWM Control, sine wave current drive mode. 220V: single-phase or three-phase full-wave rectification.
	make use of condition	Use / storage temperature[1]	0～+40 ℃/-20～+70℃
		Use / store the humidity	Below 90% RH (no condensation)
		Resistance to vibration / shock strength	4.9m/s2/19.6m/s2
		levels of protection	IP20
		class of pollution	P D grade 2
		above sea level	The highest altitude to 5000m, 1000m and below the use without lowering the forehead, 1000m above each 100m drop 1%, altitude more than 2000m, please contact the manufacturer.
position control pattern	function	feedforward compensation	Support speed feedforward (0~100.0%) setting to eliminate follow-up deviation
		Directive plastic surgery	Position command low-pass filtering, mean filtering
Speed torque control model	function	Dynamic characteristics of the current ring	Step response: 187.5 μ s (0-100%) Frequency response: -3dB amplitude attenuation bandwidth, 2000Hz (instruction signal: ± 25%); -90° phase-shift bandwidth, 3500Hz (instruction signal: ± 25%);
		speed control range	0~12000rpm, there is a speed of over 6000rpm demand, please contact the manufacturer.
		Dynamic characteristics of the velocity rings	Step response: 562.5 μ s (0~1000rpm) Frequency response: -3dB amplitude attenuation bandwidth, 1000Hz (instruction signal: ± 500rpm); -90° phase-shift bandwidth, 630Hz (instruction signal: ± 500rpm);
		Torque control accuracy	±2%
IO	Digital input signal		Function can be configured: forward switch, reverse switch, origin switch, etc.;
	Digital output signal		Functions can be configured: servo preparation, zero speed signal, speed arrival, position arrival, positioning approach signal, torque limit, warning, servo failure, etc.
Support function	Electronic gear ratio		Built-in two sets of electronic gear ratio, support gear ratio switching function
	Limit protection		Stop immediately during the forward and reverse push switch.
	fault detect		Overcurrent, overvoltage, undervoltage, overload, abnormal main circuit detection, radiator overheating, overspeed, abnormal encoder, abnormal parameters, etc.
	Display function		The 5-bit LED display, power supply indicator lamp is C HARGE

	vibration abatement	With 4 traps, 50Hz~5000Hz, 4 traps can be adaptive setting.
	Easy to use	Self-setting, velocity observer, and model tracking
	debugging interface	USB
	other	Status display, alarm record, JOG operation, etc.
Note 1: Please install or store the servo drive within this temperature range.		

1.2.2 EtherCAT Communication technical specifications

Table 1-1

project		specifications
EtherCAT Basic performance from the station	communicating protocol	EtherCAT Agreement
	Support services	CoE（PDO、SDO）
	synchronous mode	DC-Distributed clock
	physical layer	100BASE-TX
	transmission speed	100 Mbit/s (100BASE-TX)
	duplex mode	full duplex
	topology structure	Ring, linear
	Transmission media	Super-5 class or better network cable with shielding.
	transmission distance	Less than 100M between the two nodes (good environment, excellent cable).
	From the station number	The protocol supports up to 65535, and the actual use of no more than 100 units.
	EtherCAT Frame length	44 bytes ~ 1,498 bytes
	process data	The maximum single Ethernet frame is 1486 bytes.
	Sync jitter of the two slave stations	< 1μs
	refresh time	1000 switching output about 30 μ s; 100 servo shaft about 100 μ s; define different refresh times for different interfaces.
	Communication error rate	10^{-10} The Ethernet standards
EtherCAT Configuration unit	Field bus memory management unit	Eight
	The Storage Synchronization snap-in	Eight
	process data RAM	8K bytes
	Distribution clock	64 The
	EEPROM capacity	32kbit Initialization data is written through the EtherCAT master station

1.2.3 Electrical parameters of each model

Table 1-2

Physical Dimensions	SIZE-A			SIZE-B		SIZE-C	
HR3-ER	001S2	1R6S2	2R8S2	5R5S2	7R6S2	012S2	014S2
Continuous output current Arms	1.0	1.6	2.8	5.5	7.6	11.6	14.0
Maximum output current Arms	3.9	5.8	10.1	16.9	23.0	32.0	42.0
Continuous input current Arms	1.3	2.3	4.0	7.9	9.6	Single phase 12.8 Three phase 8.0	Single phase 16.0 Three phase 10.2
Power supply of main circuit	Single phase AC200V～240V -10%～+10%，50/60Hz					Single /Three phase AC200V～240V -10%～+10%，50/60Hz	
Brake release function [1]	No Built-in regenerative resistor			Optional 50Ω/50W Built-in	Optional 25Ω/80W Built-in regenerative resistor		

Note 1: The SIZE-C model is coming soon.

Note 2: All models support external regeneration resistance.

1.3 interface specification

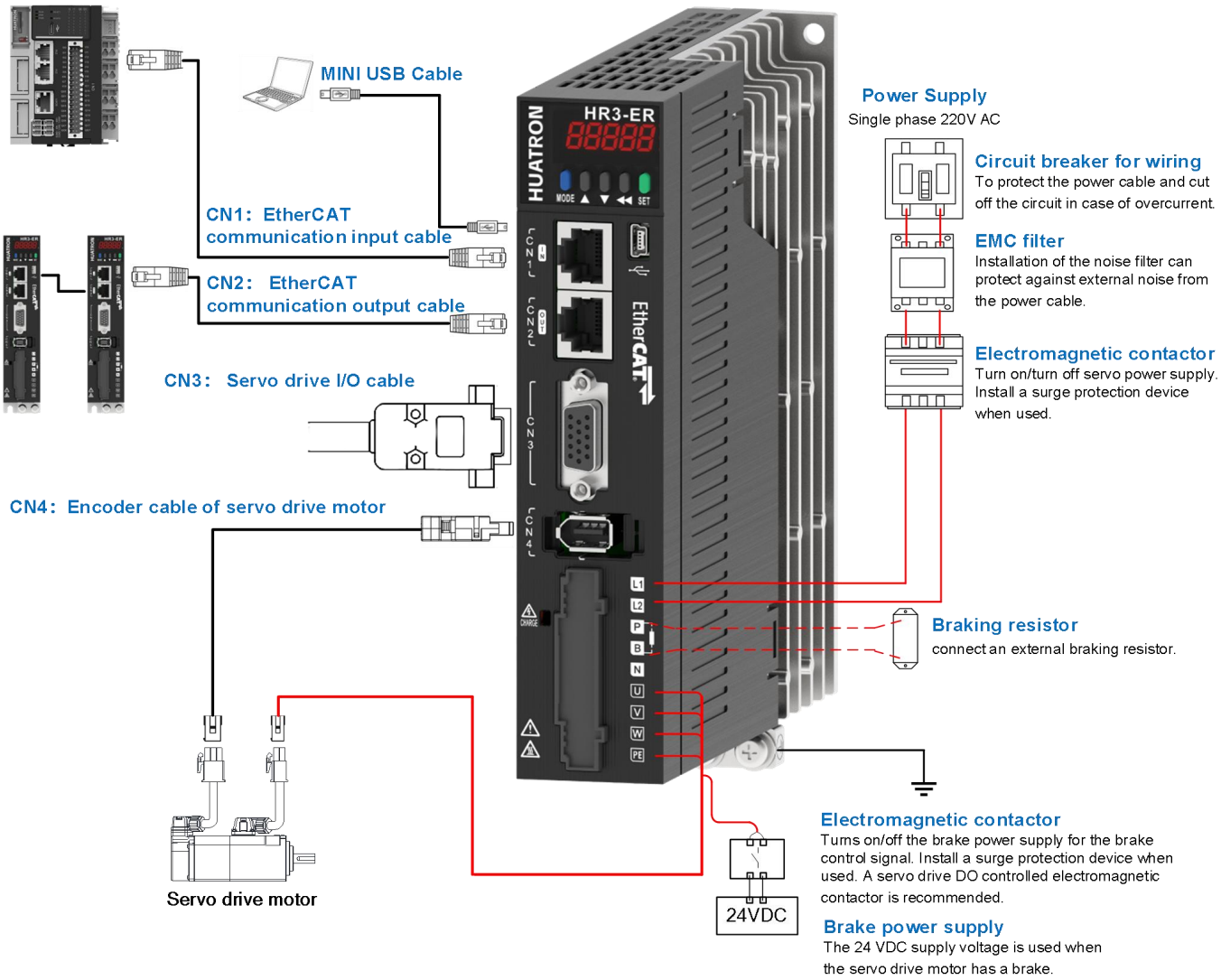

Note: 1. This figure illustrates the Single-phase 220 V drive.

Figure 1-2 Layout diagram of the SIZE-A system

- Please use a circuit breaker with leakage protection and a noise filter between the power supply and the main power supply terminals;
- The voltage and power of the holding brake power supply must meet the requirements of the motor holding brake parameters;
- When SIZE-A does not have a built-in regenerative resistor and requires the use of an external regenerative resistor, please select the appropriate resistor. Do not exceed the minimum external resistance value allowed in Table 2-3, otherwise it may cause damage to the driver.
- CN1 is the EtherCAT communication input, connected to PLC or the previous servo; CN2 is the EtherCAT communication output, connected to the next servo.

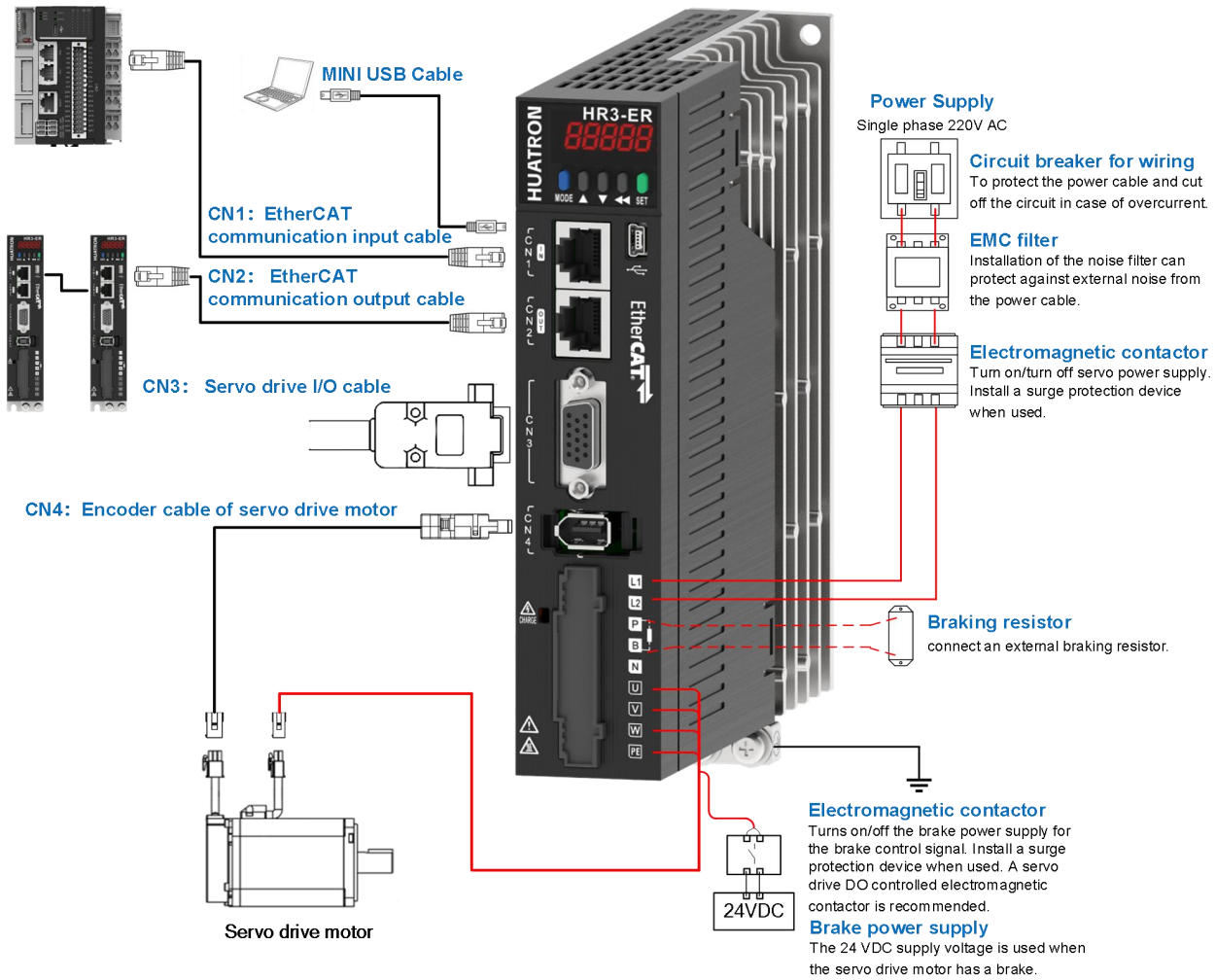

Figure 1-3 Layout diagram of the SIZE-B system

- Please use a circuit breaker with leakage protection and a noise filter between the power supply and the main power supply terminals;
- The voltage and power of the holding brake power supply must meet the requirements of the motor holding brake parameters;
- When SIZE-B does not have a built-in regenerative resistor and requires the use of an external regenerative resistor, please select the appropriate resistor. Do not exceed the minimum external resistance value allowed in Table 2-3, otherwise it may cause damage to the driver.
- CN1 is the EtherCAT communication input, connected to PLC or the previous servo; CN2 is the EtherCAT communication output, connected to the next servo.

1.4 Drive installation

1.4.1 installation site

Table 1-3 Drive installation site

Please install it in the electric control cabinet without the sun and rain
Do not use this product in any corrosive environment such as hydrogen sulfide, chlorine gas, ammonia, sulfur, chlorinated gas, acid, alkali and salt
Do not use this product in a flammable gas environment or near combustible materials
Do not install in high temperature, humidity, dust, metal dust environment
No vibration place
Pollution grade of the installation site: PD2

1.4.2 ambient condition

Table 1-4 Drive installation environment conditions

project	description
Use ambient temperature	0 ~ +40 ℃
Use ambient humidity	Below 90% RH (no condensation)
storage temperature	-20~70℃ (not frozen)
Storage humidity	Below 90% RH (no condensation)
vibrate	4.9m/s^2 The following
lash	19.6m/s^2 The following
levels of protection	IP20 Note: except for the terminal (IP00)
height	The highest altitude to 5000m, 1000m and below without use, 1000m above 100m, 1% more than 2000m please contact the manufacturer.

1.4.3 installation size

- HR3-ER SIZE-A dimensional diagram:

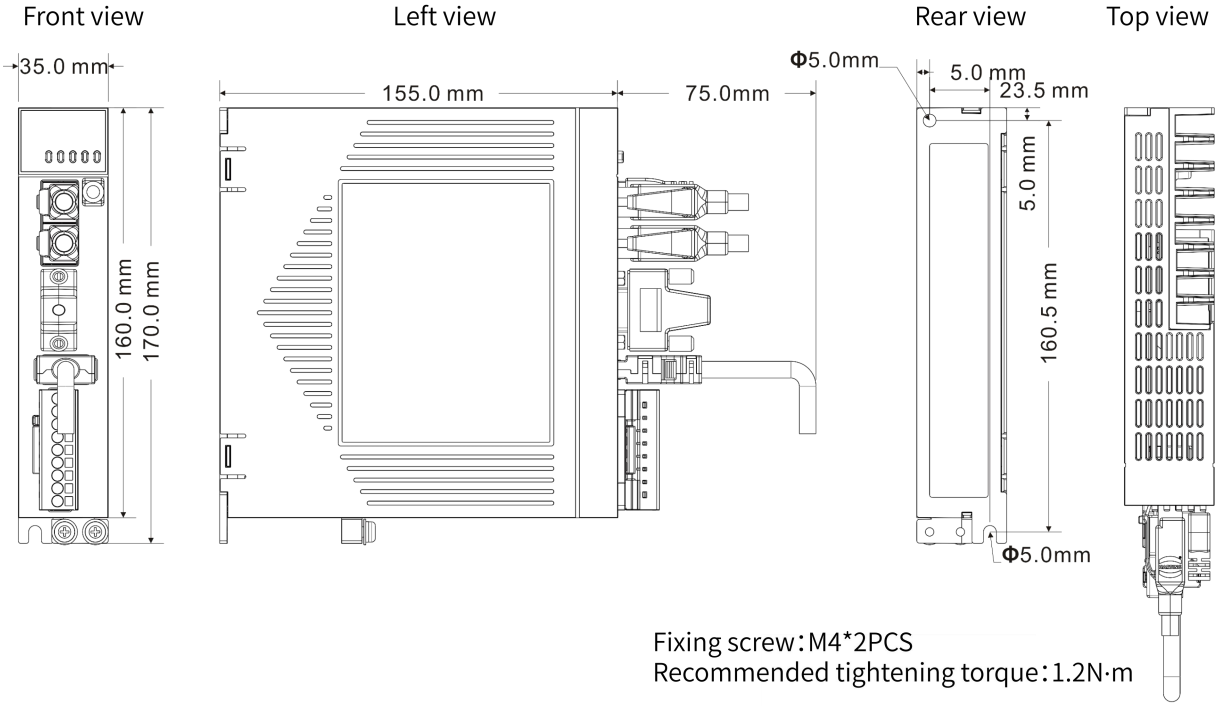

Figure 1-4 HR3-ER SIZE-A overall dimensions (in mm)

- HR3-ER SIZE-B dimensional diagram:

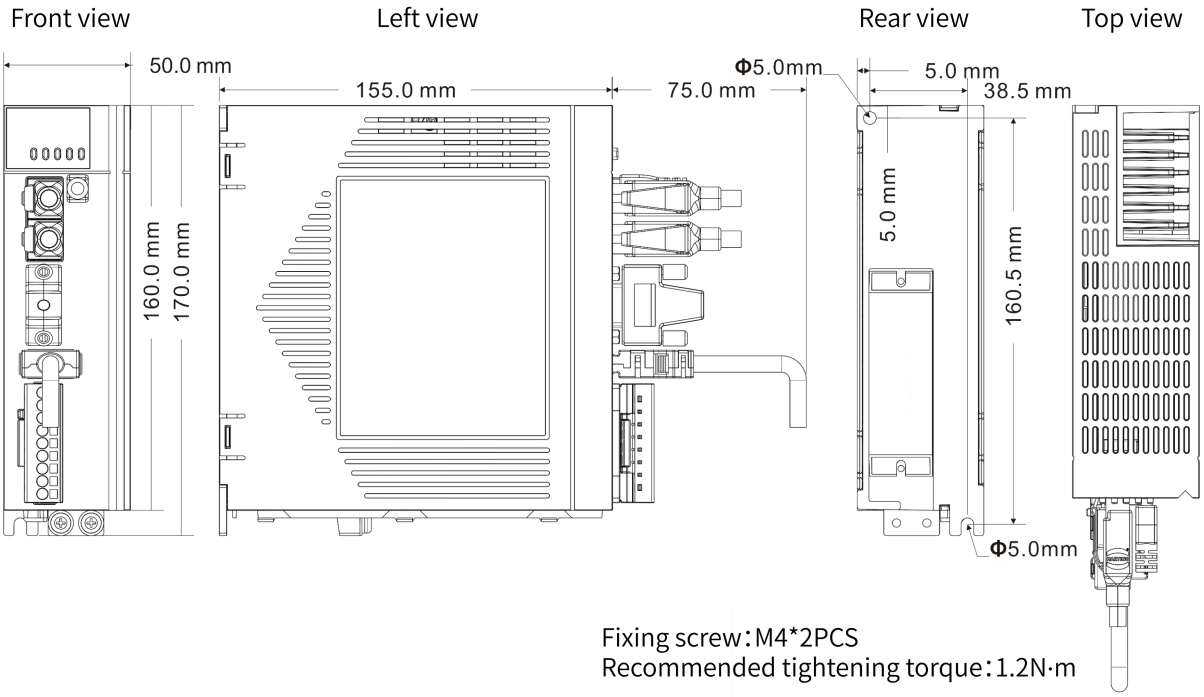

Figure 1-5 HR3-ER SIZE-B overall dimensions (in mm)

1.4.4 Installation precautions

Table 1-5 Note for drive installation

Installation requirements	1. Ensure that the installation direction is vertical to the wall (the drive installation surface and bottom surface are 90°, vertical upward). 2. Cooling the servo drive using natural convection or fan. 3. Secure it securely to the mounting surface through the servo drive mounting hole, install the screws and torque used, refer to the figure above. 4. When installation, the front of the drive is facing to the operator for easy operation and maintenance.
Radiation requirements	1. To ensure the heat dissipation effect of the drive, please refer to the following figure and design the heat dissipation scheme of the electric control cabinet. 2. Please install a cooling fan on the top of the servo drive to ensure that the ring temperature of the servo drive is uniform without local overheating.
space requirement	1. Keep spacing When installed, it is recommended to keep more than 10mm spacing on both transverse sides of the drive and more than 50mm spacing on both longitudinal sides. 2. For compact installation, it is recommended to keep more than 1mm spacing on both transverse sides of the drive and more than 50mm spacing on both longitudinal sides.

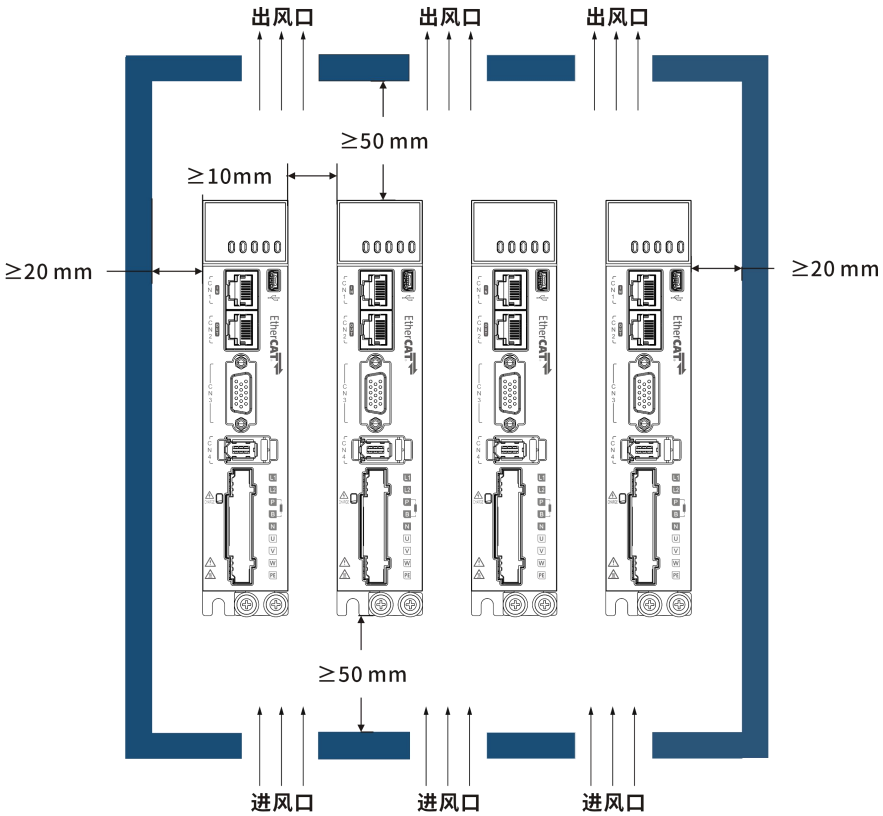

Figure 1-6 Installation diagram of servo drive (when installed with reserved spacing)

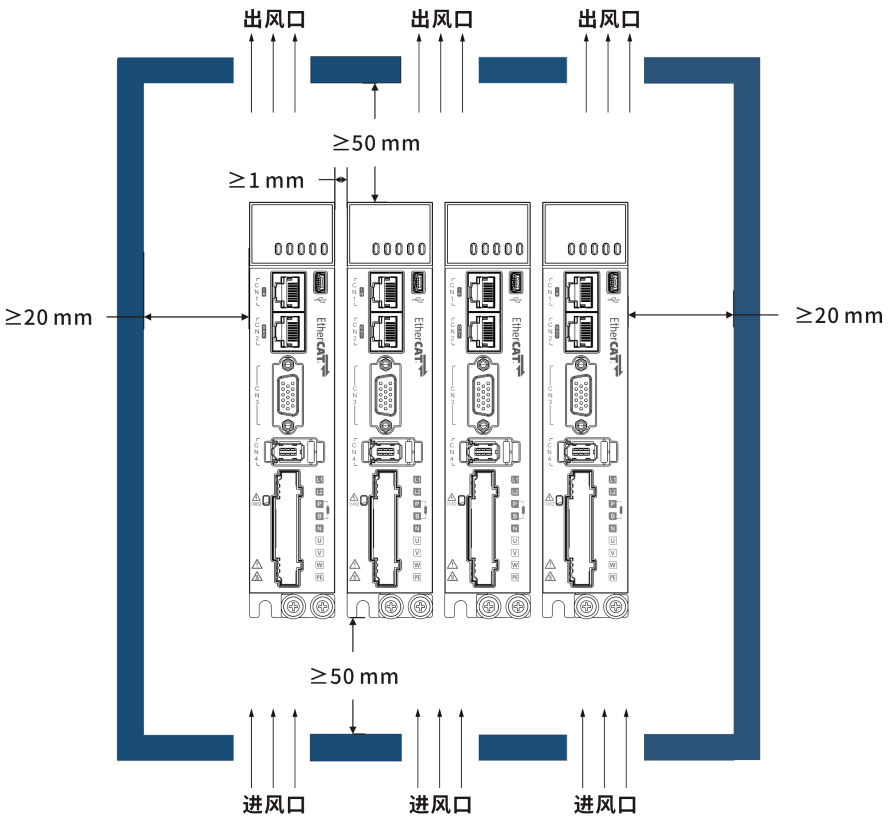

Figure 1-7 Schematic of servo driver installation (during compact installation)

1.4.5 landing

Be sure to ground the ground terminal, otherwise there may be a risk of electric shock or interference.

See the detailed introduction of the electrical grounding2.9Ground grounding and anti-interference measures.

1.4.6 Wiring requirements

When wiring the drive, wire the cable down (refer to the figure below) to avoid damage from the

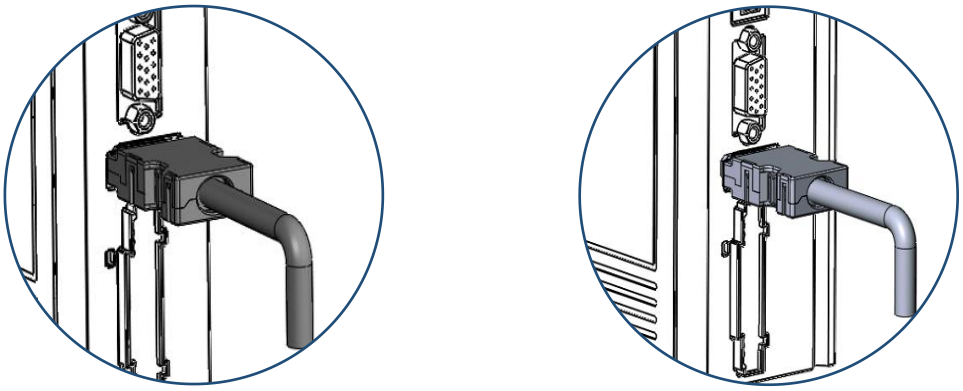

liquid along the cable into the drive.

Figure 1-8 HR3-ER SIZE-A HR3-ER SIZE-B

Figure 1-9 Schematic diagram of the servo-drive cable routing requirements

2 wiring

2.1 System wiring description

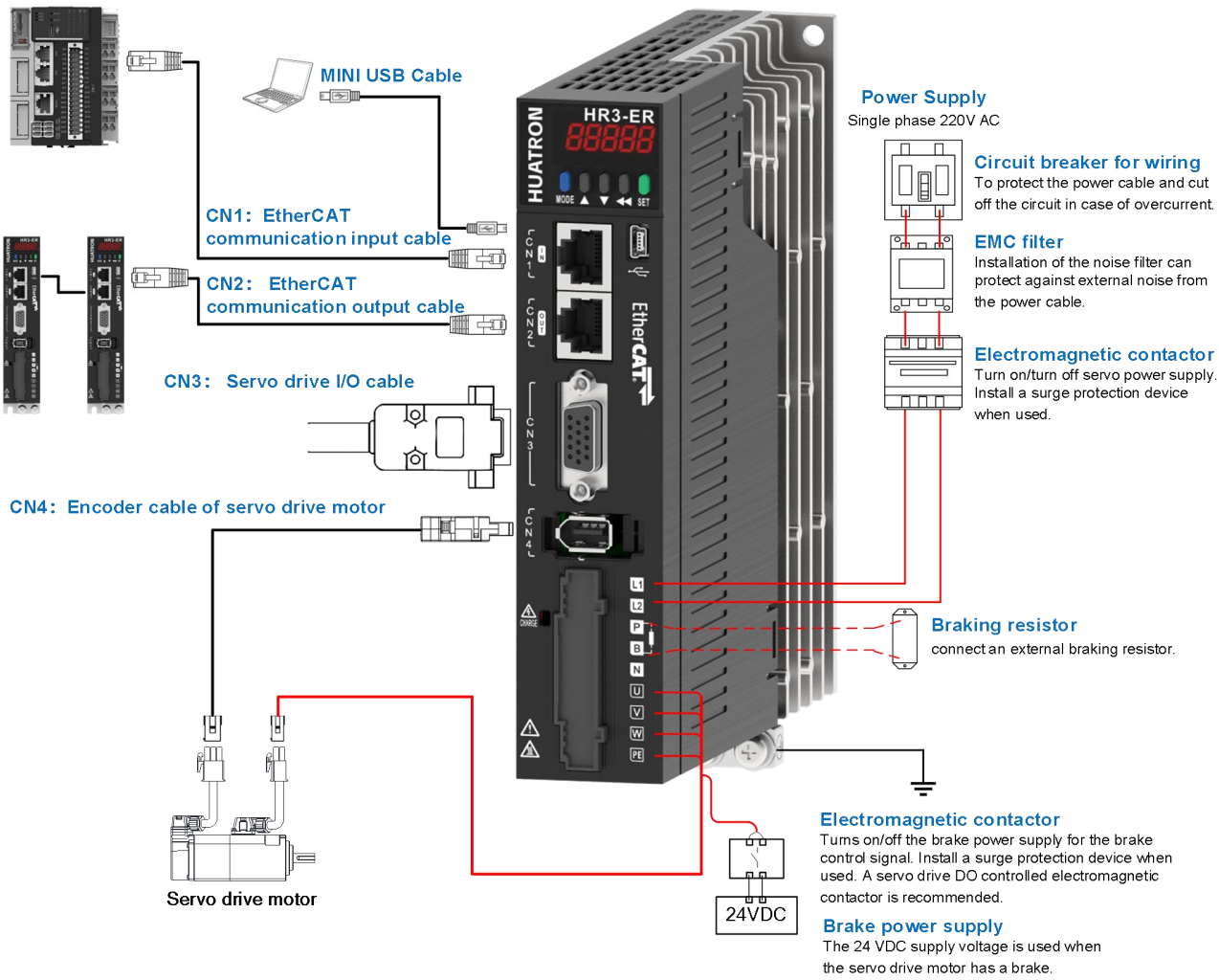

Note: 1. This figure illustrates the Single-phase 220 V drive.

Figure 2-1 The SIZE-A system wiring diagram

- Please use the circuit breaker and noise filter with leakage protection between the power supply and the main power supply terminal;
- The voltage and power of the lock power supply shall meet the requirements of the motor lock parameters;
- SIZE-A has no built-in regeneration resistance and requires external regeneration resistance, please refer to it2.4.3Section select the appropriate resistance, do not be less thanTable 2-3The allowable minimum external resistance value that otherwise may cause damage to the drive.
- CN1 is EtherCAT communication input, connecting the PLC or the last servo; CN2 is EtherCAT communication

output and the next servo.

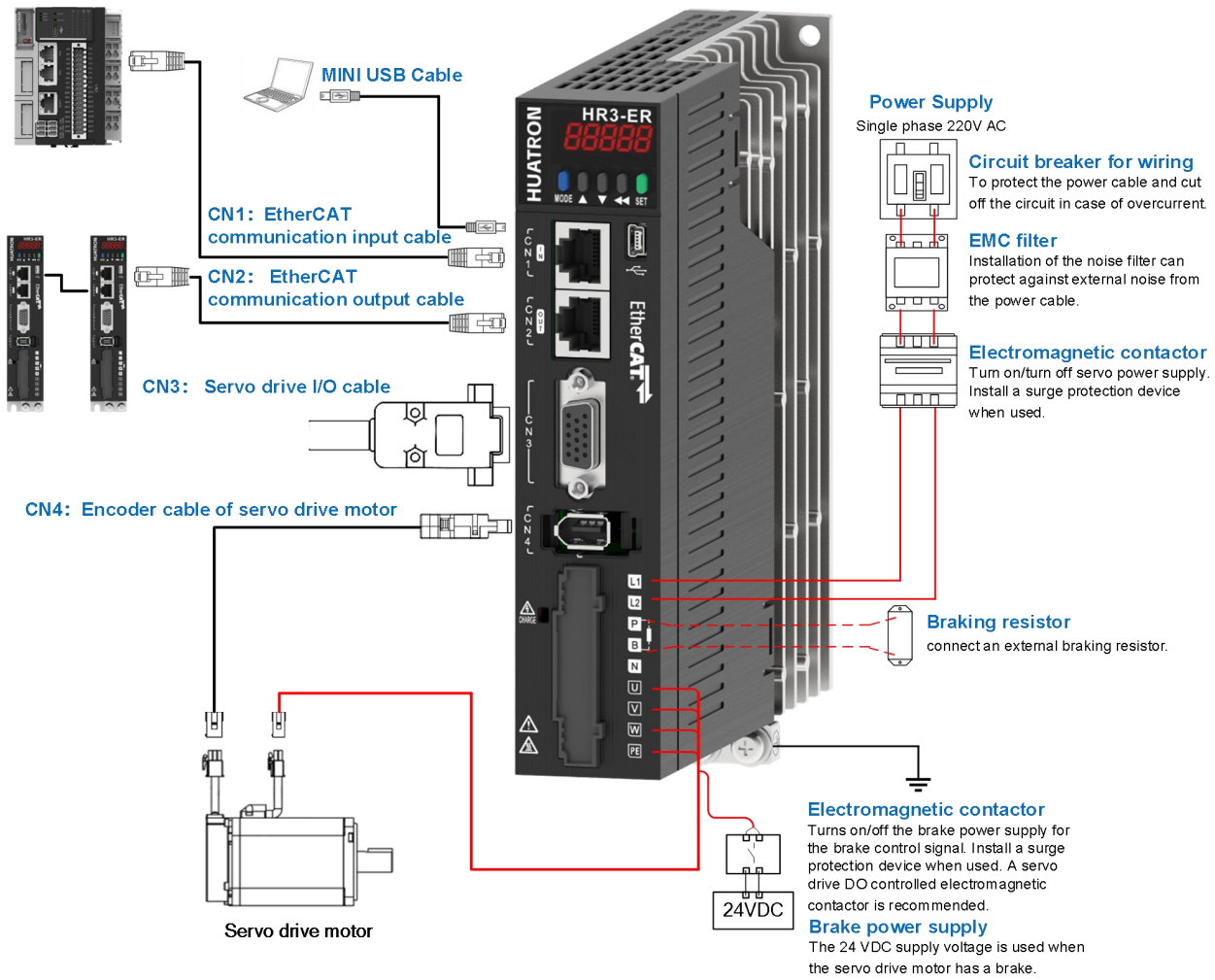

Figure 2-2 The SIZE-B system wiring diagram

- Please use circuit breaker and noise filter with leakage protection between power supply and main power supply terminal;
- The voltage and power of the lock power supply shall meet the requirements of the motor lock power supply parameters;
- SIZE-B has no built-in regeneration resistance, requiring external regeneration resistance, please refer to2.4.3Section select the appropriate resistance, do not be less thanTable 2-3The allowable minimum external resistance value that otherwise may cause damage to the drive.
- CN1 is EtherCAT communication input, connecting the PLC or the last servo; CN2 is EtherCAT communication

output and the next servo.

2.2 Servo-drive port definition

Servo-drive port definition

	The pin number	Signal name
MINI USB	1	VBUS
	2	D-
	3	D+
	4	-
	5	GND

	CN1（IN）		CN2(OUT)	
	The pin number	Signal name	The pin number	Signal name
EtherCAT Communication terminal	1	TX+	1	TX+
	2	TX-	2	TX-
	3	RX+	3	RX+
	4	-	4	-
	5	-	5	-
	6	RX-	6	RX-
	7	-	7	-
	8	-	8	-

CN3	The pin number	signal name	The pin number	signal name
IO Connector DB15	1	DO1+	9	DI2
	2	DO2-	10	DI1
	3	DO2+	11	DI5
	4	DO3-	12	-
	5	DO3+	13	COM+
	6	DO1-	14	COM-
	7	DI4	15	+24V
	8	DI3		

CN4	The pin number	Signal name
encoder jun	1	5V
	2	GND
	3	-

2.3 Power terminal definition and wiring instructions

2.3.1 Power supply and motor terminal definition

Table 2-1 SIZE-A / B main circuit terminal definition

Junctor	Terminal number	Terminal label	Terminal function	Description
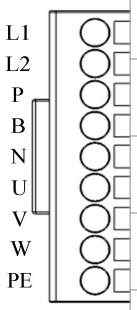	1	L1	Main power input	Single-phase AC200V～240V，-10～+10%，50/60Hz
	2	L2		
	3	P	Regeneration function	If an external regenerative resistor is needed, connect it between terminals P and B.
	4	B		
	5	N		
	6	U	Motor Drive	Connected to U, V, W and PE phases of the servo motor.
	7	V		
	8	W		
	9	PE		

2.3.2 Card spring type terminal wiring method

The power terminal uses a circlip connector for quick connection. When connecting the power terminal, follow the following flowchart to ensure reliable connection.

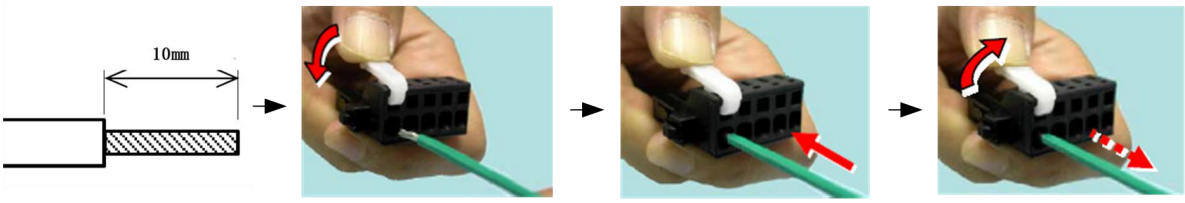

Figure 2-3 Circlip type terminal connection method

- Peel off the insulation layer of the wire, with a bare wire length of 10mm.
- Press the operating lever to release the internal spring.
- Insert all bare wires into the connector.
- Release the operating lever, gently pull the wire to confirm secure connection, and then complete the wiring.

2.3.3 Example of the main circuit wiring

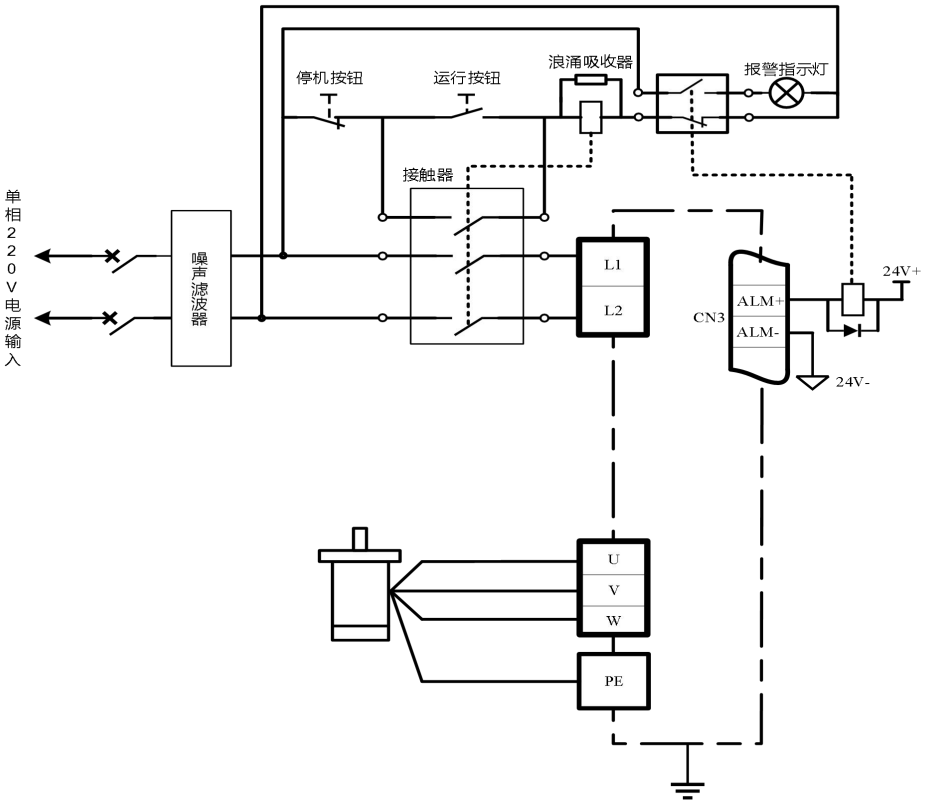

Figure 2-4 SIZE-A. Example of the A / B main circuit wiring

- Do not connect the power input (L1, L2) to the motor output terminal (U, V, W);
- The motor output terminal (U, V, W) wiring is consistent with the motor (U, V, W), and cannot be misordered;
- Do not connect the regeneration resistance to the P and N terminals, otherwise it may cause damage to the servo and regeneration resistance, or even cause fire due to overheating of the regeneration resistance;
- Do not wire the power cord and the signal wire together, between the two should keep more than 30cm spacing;
- Do not frequently switch the servo power supply, otherwise it will cause the servo internal to frequently charge the capacitor, the pre-charging road load is too large, resulting in performance decline. Control the switch frequency below once per minute;
- After the servo power failure, there may still be residual high voltage inside. After the power is turned off for 15 minutes, the power is connected until the power indicator light is off.

2.3.4 Specification of the main loop cable

Table 2-2 Recommended cable specifications for the main circuit

s	serie	or	actuat model	L1、L2、 L3		P、B		U、V、W		PE	
				mm 2	AWG	mm2	AWG	mm2	AWG	m m2	AWG
Single-phase 220V power supply											
-A	SIZE		001S2	2x0 .75	18	2x0. 75	18	3x0. 75	18	0. 75	18
			1R6S2	2x0 .75	18	2x0. 75	18	3x0. 75	18	0. 75	18
			2R8S2	2x0 .75	18	2x0. 75	18	3x0. 75	18	0. 75	18
-B	SIZE		5R5S2	2x0. 75	18	2x0. 75	18	3x0. 75	18	0. 75	18
			7R6S2	2x1. 00	17	2x1. 00	17	3x1. 00	17	1. 00	17
-C	SIZE		0 12S2	2x1. 5 0	15	2x1. 50	15	3x1. 50	15	1. 50	15
			0 1 4 S2	2x2. 0 0	14	2x2. 00	14	3x2. 00	14	2. 00	14
Three-phase, 2 20V power supply											
-C	SIZE		0 12S2	3x1. 00	1 7	2x1. 50	15	3x1. 50	15	1. 50	15
			0 14S2	3x1. 5 0	15	2x2. 00	14	3x 2 .00	14	2 . 00	14

2.4 Regeneration resistance wiring instructions

2.4.1 Regeneration resistance wiring

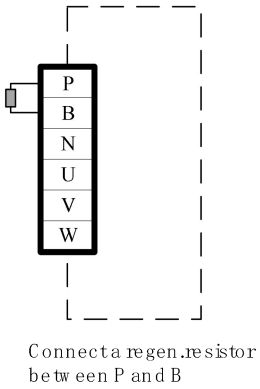

Figure 2-5 Regeneration resistance wiring

- For external regeneration resistance, please refer to2.4.3Section select the appropriate resistance, do not be less thanTable 2-3Permissible minimum external resistance value, which may cause damage to the drive;
- The external regeneration resistance is connected to the P-B;
- Do not connect the regeneration resistance between the bus P and N, otherwise it will cause drive damage and fire;
- Before servo use, please confirm that relevant parameters of external regeneration resistance are set: P02.34 (regeneration resistance selection), P02.39 (external regeneration resistance power), P02.40 (external regeneration resistance value).

2.4.2 Regeneration resistance specification

Table 2-3 Regeneration resistance specification

Servo driver Rated voltage and current		Min resistance of external resistor	Max braking energy absorbed by capacitance EC
Single phase 220V	1.0A	50Ω	5J
	1.6A	50Ω	10J
	2.8A	45Ω	15J
	5.5A	40	26J
	7.6A	20Ω	26J
Single/three phase 220V	12A	15Ω	44J
	14A	15Ω	53J

2.5 Lock wiring instructions

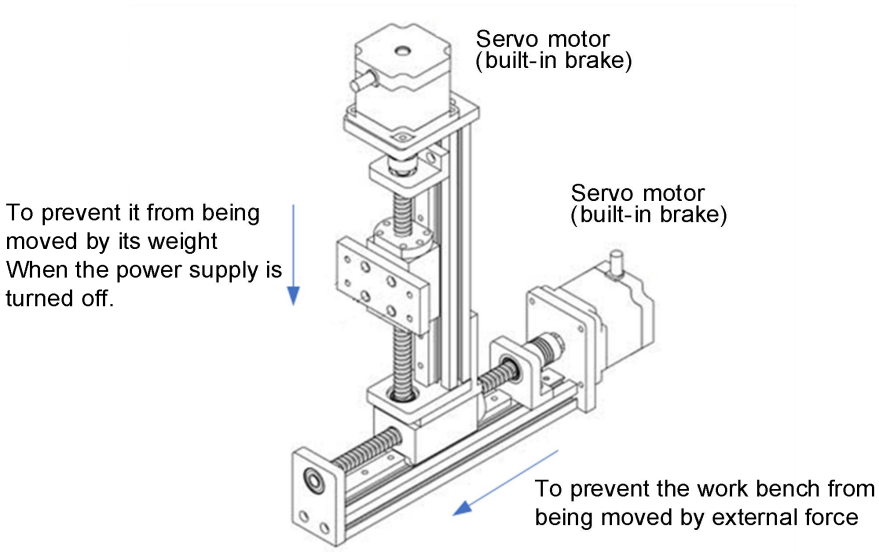

Figure 2-6 Schematic diagram of the lock application

The motor lock is used to stop the unexpected movement of the moving load (such as falling under gravity) when the servo system is not activated (such as the servo system power failure) to prevent the accidental movement of the servo motor due to its own weight or external force.

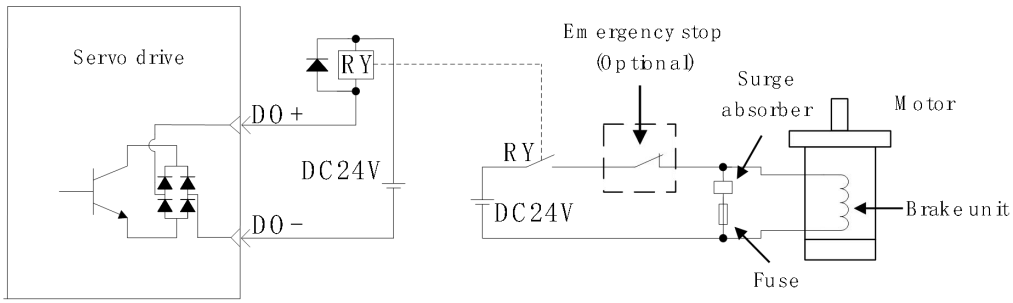

Figure 2-7 Lock wiring diagram

- The lock mechanism built in the servo motor is only used for the shutdown lock of the motor. Frequent use of the motor lock for emergency stop operation will shorten its service life. When the servo motor speed is less than 20rpm, the lock power supply is allowed to break;
- It is recommended to use an independent power supply to prevent the abnormal voltage reduction and misoperation of the lock;
- Use different power sources to supply the lock and lock control signals separately to avoid electromagnetic interference on electronic devices.

2.6 Description of the CN3-port wiring for the control signal

2.6.1 Control signal CN3 port definition

Table 2-4 Control signal CN3 port definition

IF Interface connector (CN3)	Module name	Signal name	Needle foot number	Default function
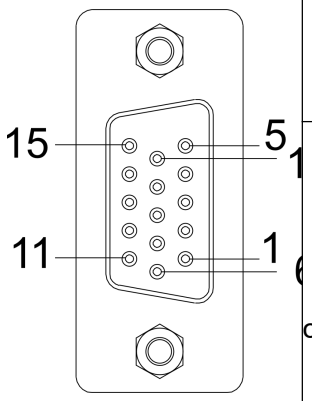 DB15MU	Digital input	DI1	10	Forward limit
		DI2	9	Reverse limit
		DI3	8	Origin switch
		DI4	7	Probe 1
		DI5	11	Probe 2
		COM+	13	common port
	Digital output	DO1+	1	Lock control
		DO1-	6	
		DO2+	3	Servo operation
		DO2-	2	
		DO3+	5	Servo fault output
		DO3-	4	
	The 2 4V output power supply	+24V	15	The 24V output power supply
		COM-	14	
	hull	—	—	Connect cable shielding layer

2.6.2 Digital quantity input wiring instructions

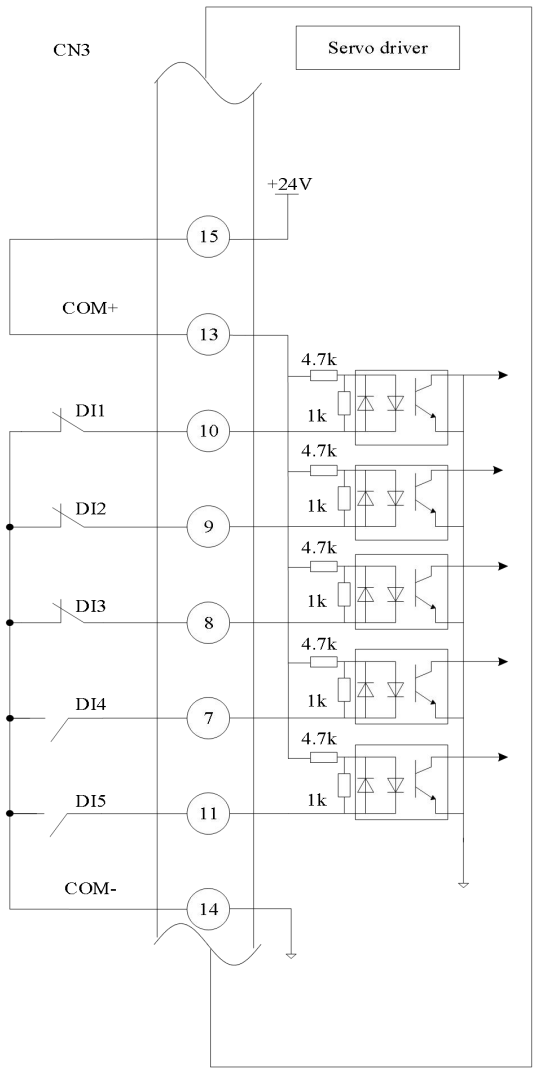

Figure 2-8 Digital quantity input wiring

(1) The host controller provides relay output

a) When using the internal 24V power supply:

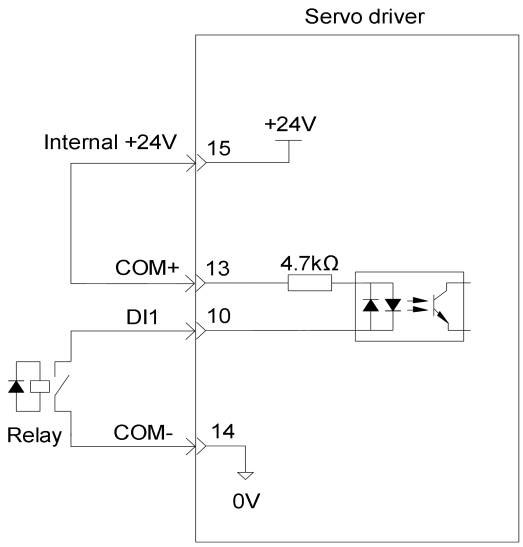

b) When using an external power supply:

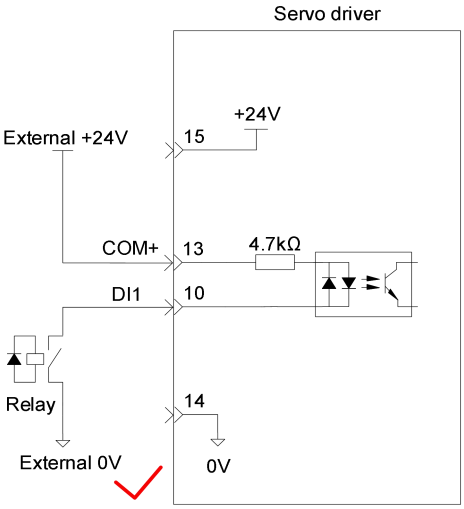

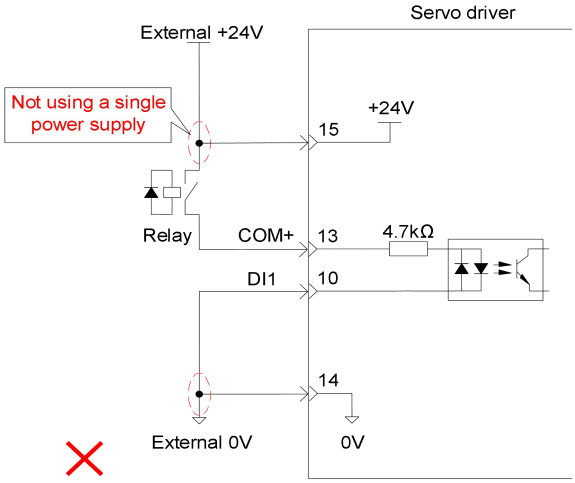

(2) The host controller provides open-collector output

a) When using the internal 24V power supply:

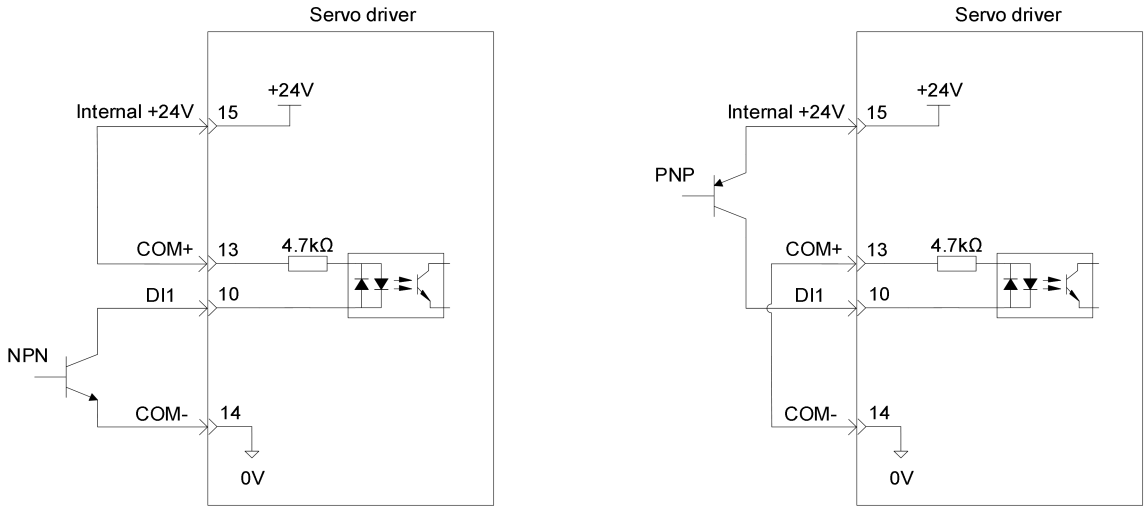

Figure 2-9

b) When using an external 24V power supply:

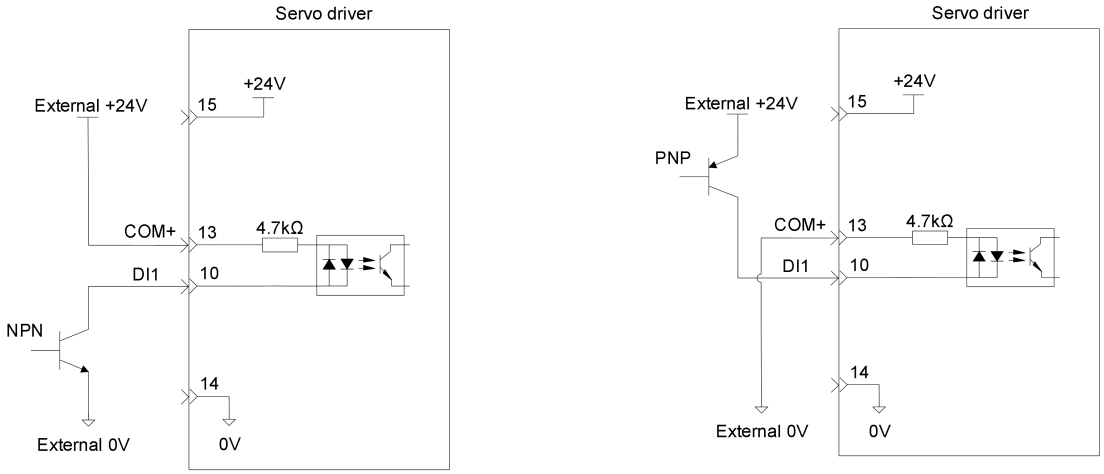

Figure 2-10

➢ PNP and NPN input cannot be used together in the same circuit.

2.6.3 Wiring of Digital output

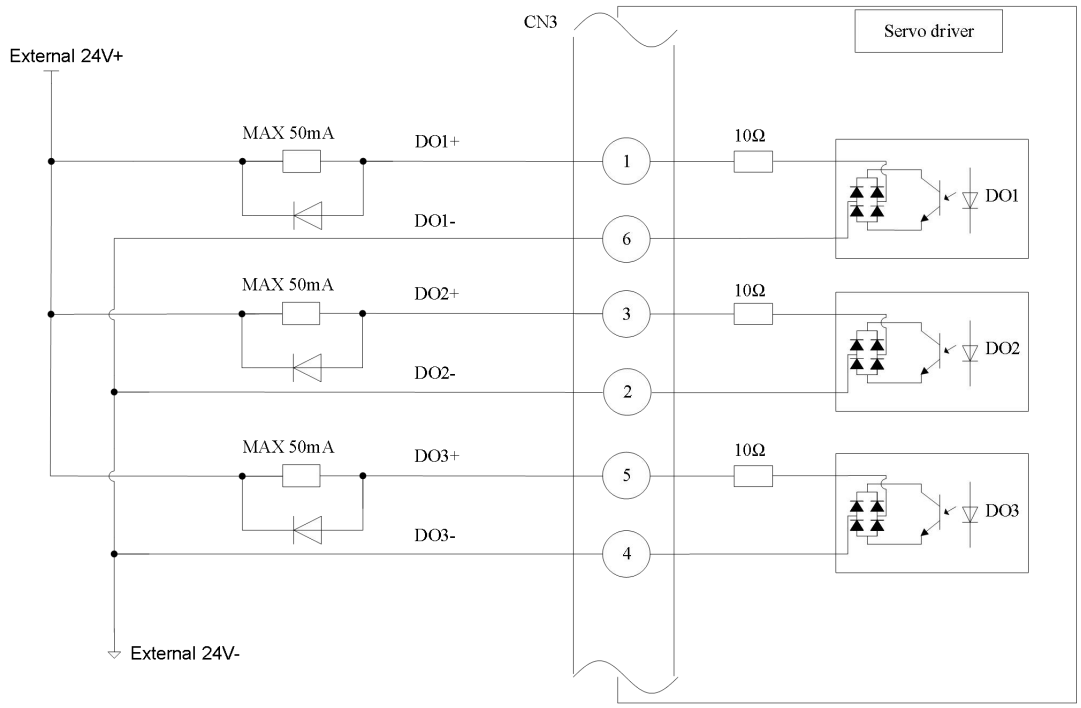

- The maximum permissible voltage and current capacity of the optocoupler output circuit inside the servo drive are as follows:
  - Maximum voltage: DC30V;
  - Maximum current: DC50mA;

(1) The host controller provides relay input

- Correct wiring:

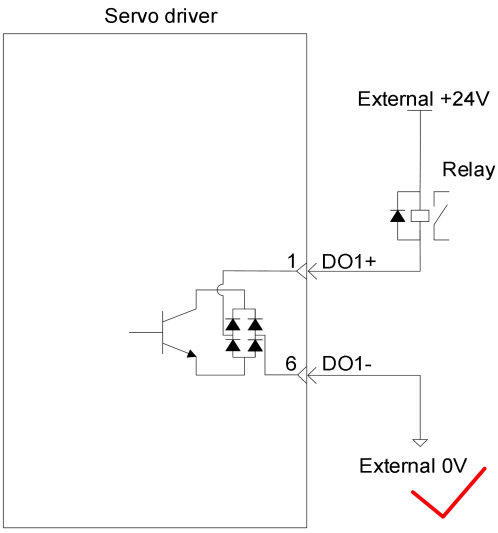

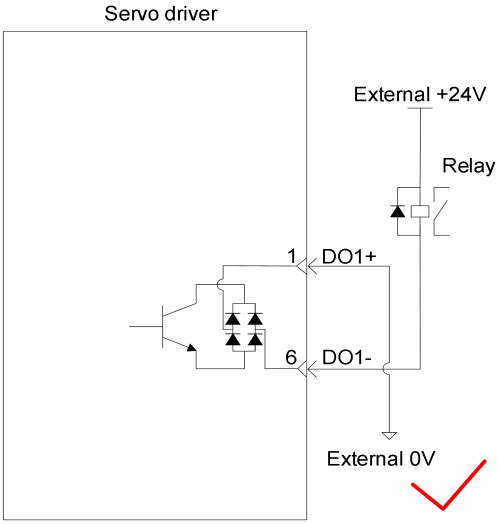

- Incorrect wiring:

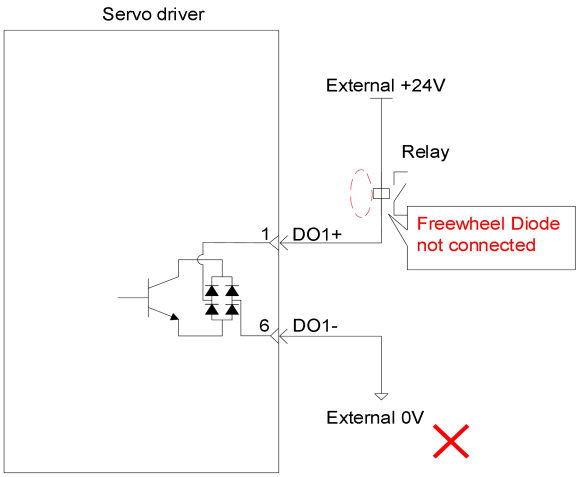

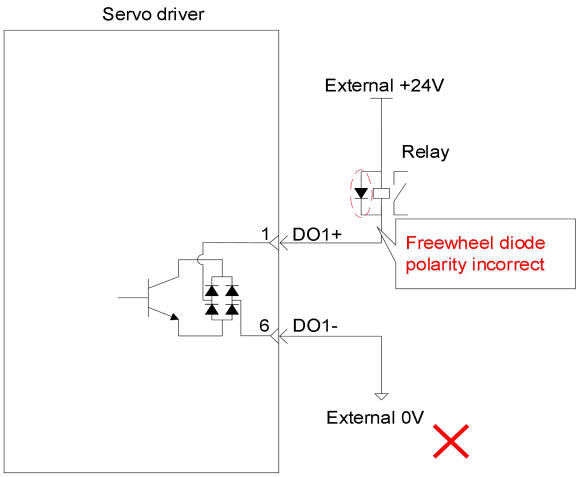

(2) The host controller provides optocoupler input:

- Correct wiring:

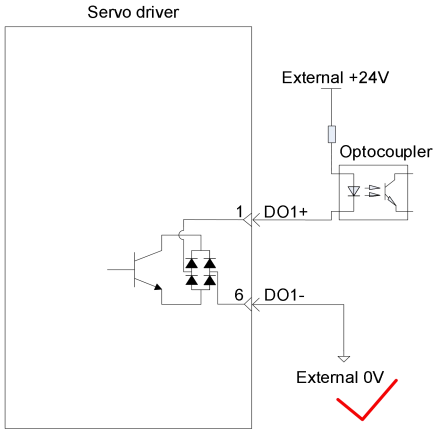

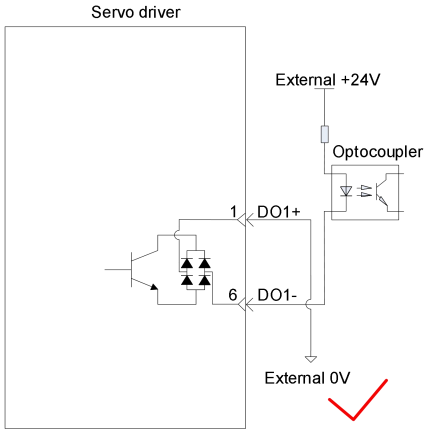

- Incorrect wiring:

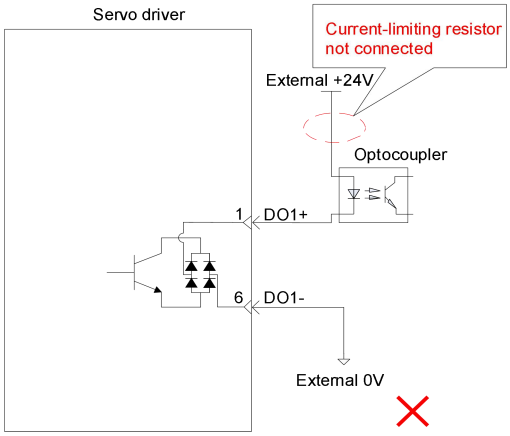

2.7 Encoder terminal definition and wiring description

2.7.1 Motor encoder

Table 2-5 Motor encoder interface definition

Motor encoder CN2	Signal Name	Pin No	Wiring method	Function
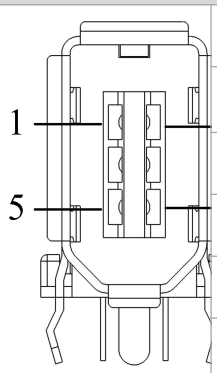	5V	1	Twisted pair	5V power supply
	GND	2		
	—	3		—
	—	4		—
	SD+	5	Twisted pair	Encoder signal
	SD-	6		
IEEE 1394 6P	PE	enclosure	Shield layer	shield

- This port is used for the driver and the motor encoder, during the use, the cable and the main circuit wiring 30cm apart;
- The encoder uses UL2464 standard 26 AWG and above;
- The length of the encoder cable needs to consider the pressure drop caused by the wire resistance, and the signal attenuation caused by the distribution capacitor. It is recommended that the length of the cable should be within 10m.

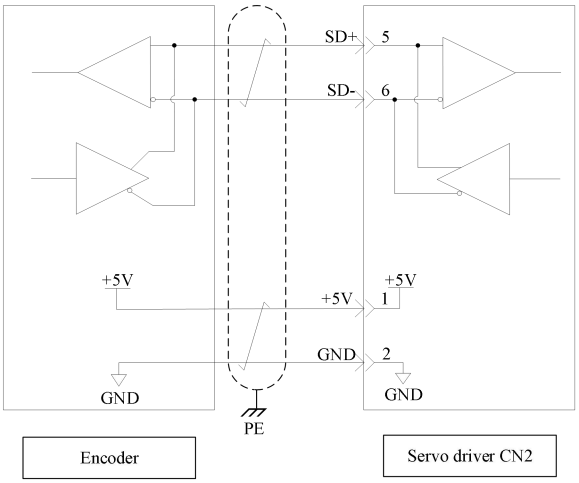

Figure 2-11 Motor encoder signal input

2.8 Communication terminal definition

2.8.1 Backstage debugging terminal

Table 2-6 Background to debug the terminal definition

Background to debug the connector	Module name	Signal name	Needle foot number	function
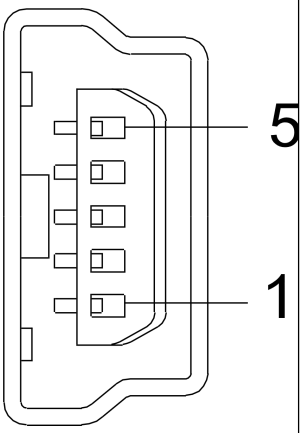 MINI USB	Backstage debugging port	VBUS	1	USB communication
		D-	2	
		D+	3	
		—	4	
		GND	5	
		hull	—	

➢ This port is used to connect the drive and the computer, which can test the drive operation, parameter adjustment, waveform acquisition and so on.

2.8.2 EtherCAT Terminal

Table 2-7 EtherCAT Terminal definition

EtherCAT Connector (CN1, CN2)	Module name	Signal name	Needle foot number	function
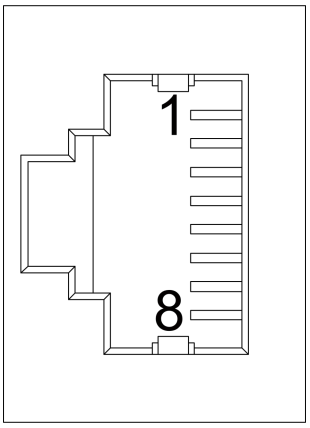 RJ45	EtherCAT Terminal	RX+	3	EtherCAT Communication
		RX-	6	
		TX+	1	
		TX-	2	
		hull	—	shield

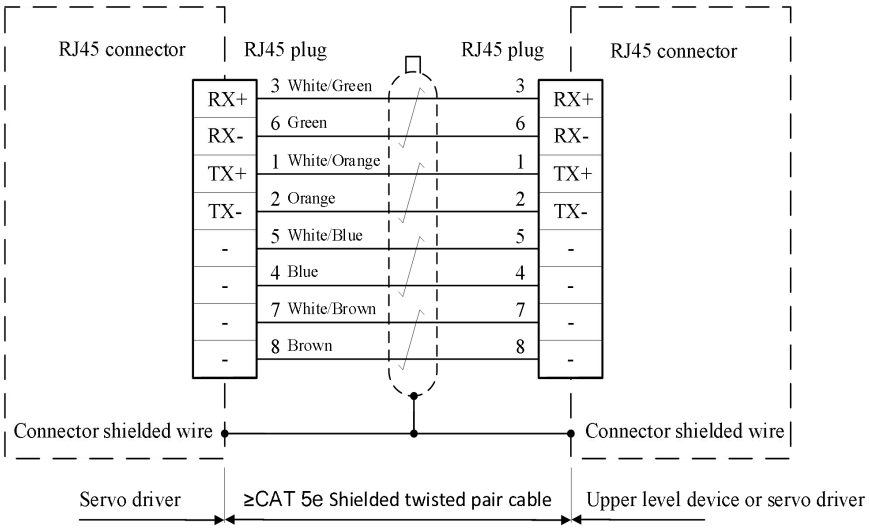

Figure 2-13 EtherCAT Communication wiring instructions

- Please use CAT 5e of STP and above (Shielded Twisted Pair) shielding twisted pair wire, shielded connection to the network port shell metal, to ensure the EMC performance;
- The wiring length of the communication cable shall be less than 100m.

2.9 Ground grounding and anti-interference measures

2.9.1 Ground measures

Table 2-8 Ground considerations of the servo controller

Install the drive on the metal housing (control cabinet)
Connect the ground terminal of the servo motor to the ground terminal PE of the servo drive, and ground the PE terminal reliably
The drive must be single-point grounded
Use thick wire for grounding wiring whenever possible (2.0mm^2 above), please use 3.5mm as far as possible2 Braided copper wire is recommended for the above thick wire
Ground above D (ground resistance is less than 100 Ω)
Be sure to connect the ground terminal of the drive and the ground wire (PE) of the control cabinet to avoid electric shock
There are two protective grounding terminals, so please do not connect all the lines together with the protective grounding terminals (PE)

2.9.2 Anti-interference measures

Due to the different use of peripheral wiring, grounding and anti-interference devices, the switch noise may affect the normal operation of the system. Therefore, the correct grounding method and anti-interference measures must be adopted. The following figure is the schematic diagram of the anti-interference measures of the servo driver.

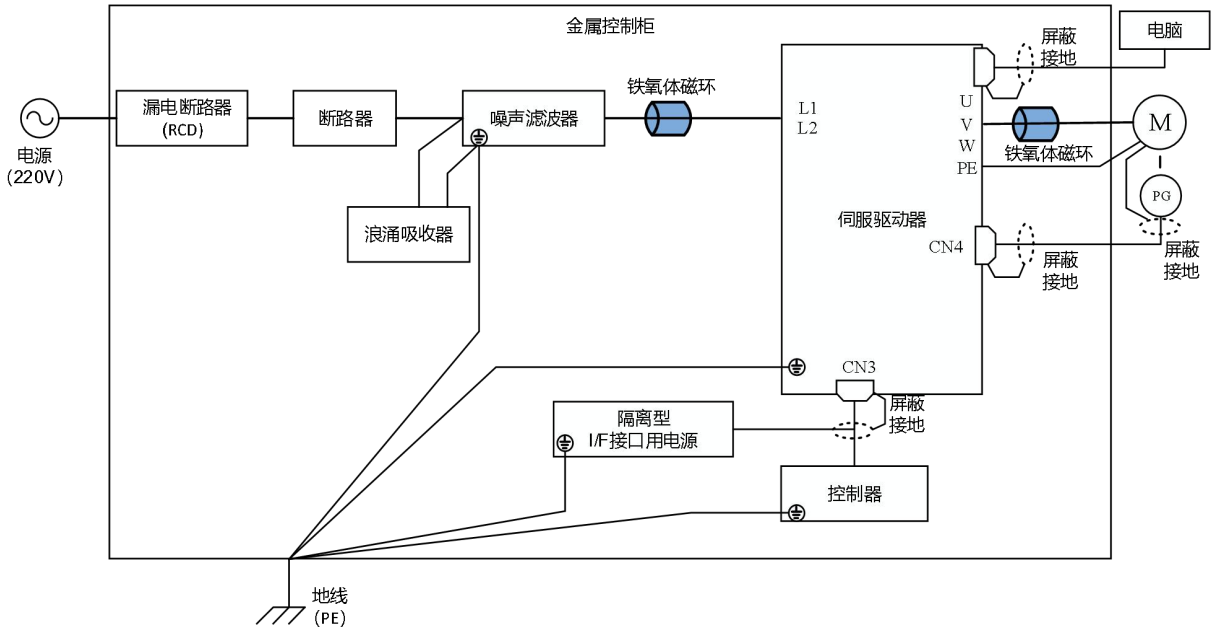

Figure 2-14 Schematic diagram of the anti-interference measures of the servo drive

- The length is below 3m; the encoder cable is below 20m, and use twisted pair shielding wire;
- Please separate the strong current cable from the weak current cable, and keep an interval of more than 30cm. Do not put in the same pipe or bundle together;
- Install ferrite magnetic ring for all cables, input and output lines and power cables used for drive connection;
- Install the surge inhibitor on the coil of the relay, screw pipe and electromagnetic contactor;
- Please install the noise filter on the input side of the power line, and do not share the power supply with the welding machine and discharge processing equipment;
- Please connect the shielding wire of all cables to the ground wire (PE);
- Ground both ends of the shield layer of the motor encoder cable.

2.9.3 noise filter

(1) The noise filters is used

In order to prevent the power cord and weaken the influence of servo drive on other sensitive equipment. Follow the following guidelines when selecting, installing and wiring noise filters:

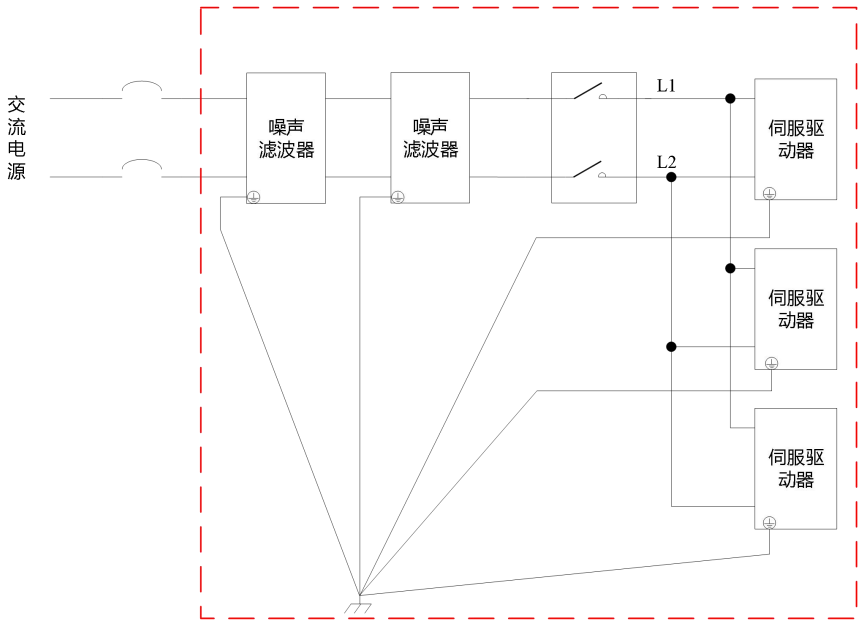

Figure 2-15 The atic diagram of installation and grounding

- Please select the corresponding noise filter according to the input current size;
- Please arrange the noise filter input and output wiring separately, do not arrange the two in the same pipe or tie them together;
- Separate the ground wire of the noise filter from its output power line;
- Noise filter should use a single point of grounding, grounding wire as far as possible to use a short and thick cable;
- When the noise filter and servo driver are installed in a control cabinet, it is recommended to fix the filter and servo driver on the same metal plate to ensure that the contact part is conductive and well overlapped, and ground the metal plate;
- When installing the filter, the connection cable between the filter and the driver must be as short as possible, with less than 30cm. At the same time, ensure that the filter and the driver are connected to the same grounding reference surface, to ensure the reliable grounding of the filter, otherwise the filtering effect of the filter cannot be achieved;
- When using multiple drives and sharing one noise filter in the power supply department, please consult the noise filter manufacturer. If the noise reaches the limit, the two series use will be a better effect (as shown in the figure above).

(2) Noise filter type selection

The noise filter has recommended use of standard EMC filter and the manufacturer ner (SCHAFFNER), whose appearance is shown in the figure below:

Chevner (SCHAFFNER) FN3258 series filter Chevner (SCHAFFNER) FN2090 series filter

Figure 2-16 EMC filter profile diagram of Chevner (SCHAFFNER)

Servo driver model and recommended EMC filter models are shown in the following table:

Table 2-9 Recommended manufacturer and model of EMC input filter

series	Drive model	Rated input current (A)	Filter model
		In	(SCHAFFNER)
Single-phase 220V power supply			
SIZE-A	H R3-ER001S2	1.2	FN2090-3-06
	H R3-ER1R6S2	2.3	FN2090-3-06
	H R3-ER2R8S2	4.0	FN2090-4-06
SIZE-B	H R3-ER5R5S2	7.9	FN2090-8-06
	H R3-ER7R6S2	9.6	FN2090-10-06
SIZE-C	H R3-ER012S2	12.8	FN2090-16-06
	H R3-ER014S2	1 6.0	FN2090-16-06
Three-phase, 220V power supply			
SIZE-C	H R3-ER012 S2	8 .0	FN 3258-16-44
	H R3-ER01 4 S2	1 0.2	FN 3258-16-44

Recommended EMC filter installation size description:

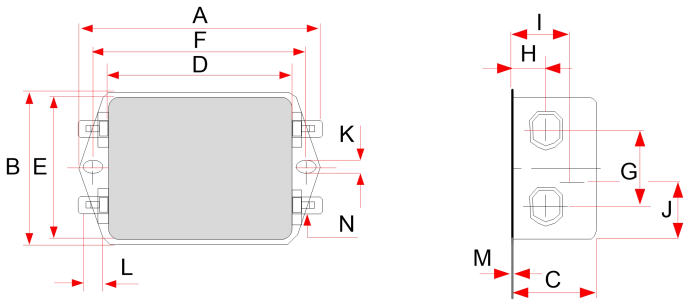

Figure 2-17 FN 2090 Series 1-20A filter size diagram (unit: mm)

Table 2-10 FN 2090 Series 1-20A Filter Size Table (mm)

rated current (A)	A	B	C	D	E	F	G	H	I	J	K	L	M	N
1	71	46.6	22.3	50.5	44.5	61	21	10.8	16.8	25.25	5.3	6.3	0.7	6.3×0.8
3 4 6	85	54	30.3	64.8	49.8	75	27	12.3	20.8	19.9	5.3	6.3	0.7	6.3×0.8
8 10 12 16	113.5±1	57.5±1	45.4±1	94±1	56	103	25	12.4	32.4	15.5	4.4	6	0.9	6.3×0.8

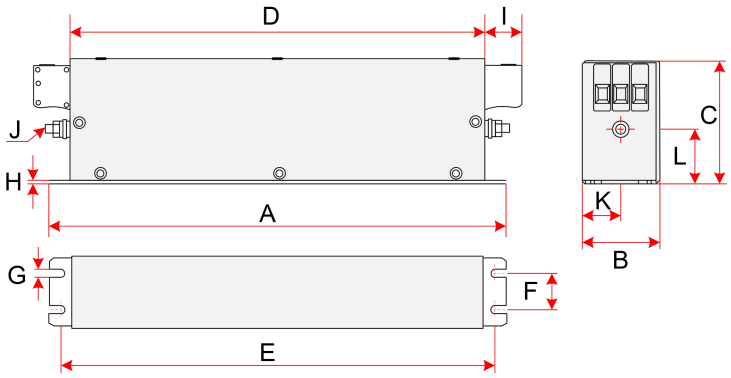

Figure 2-18 FN3258 Series 7-30A filter size diagram (unit: mm)

Table 2-11 FN3258 Series 7-30A filter size table

rated current (A)	A (mm)	B (mm)	C (mm)	D (mm)	E (mm)	F (mm)	G (mm)	H (mm)	I (mm)	J	K (mm)	L (mm)
7	190	40	70	160	180	20	4.5	1	22	M5	20	29.5
16	250	45	70	220	235	25	5.4	1	22	M5	22.5	29.5
30	270	50	85	240	255	30	5.4	1	25	M5	25	39.5

2.9.4 earth leakage circuit breaker

The servo driver generates high-frequency leakage current during operation, and the following matters should be noted for installing the leakage protection device (RCD):

- The equipment can produce the DC leakage current in the protective conductor, and must use the type B (delay type) leakage protection circuit breaker;
- The drive capacity, the carrier frequency, the type and length of the motor cable, the EMI filter will affect the size of the leakage current, the need to set a reasonable protection threshold;
- The drive will produce certain high frequency leakage current. In order to avoid RCD misoperation, please select RCD with action current above 100 mA for each drive;
- When multiple drives share one RCD in parallel, the RCD with action power above 300 mA should be selected.
- Recommended to use Chint, Schneider and other brands of leakage protection circuit breaker;

brand	model	rated operational voltage Ue	rated operational current In	action current IΔn
Chint	The NL 210 series Type B residual current action circuit breaker	2P：AC230V 4P：AC400V	25A、40A、63A	100mA、300mA
Schneider	The Acti 9 series Type iID residual current action circuit breaker (Class B SI anti-interference type)			300mA

When the leakage current generated by the drive causes the leakage protection circuit breaker action, the following measures can be taken:

- Improve the rated action current of the leakage protection circuit breaker;
- Replace the leakage protection circuit breaker for the B type, delay type, and has a high-frequency suppression effect;
- Reduce the carrier frequency;
- Shorten the output drive cable length;
- Install the electric leakage suppression equipment.

2.9.5 Cable and wiring requirements

(1) Power cable requirements

In order to meet the requirements of CE mark EMC, the motor power cable must be equipped with a shielding layer, and the shielding layer must be well grounded. There are three shielding cables of phase conductors and four shielding cables of phase conductors. If the electrical performance of the shielding layer cannot meet the requirements, add a separate PE line. Or four phase conductors, one of which is PE wire. To effectively suppress the emission and conduction of RF interference, the shielding layer of the shielding line is composed of a coaxial copper braided belt. To increase the shielding efficiency and electrical conductivity, the braid density of the shielding layer should be greater than 90%.

Recommended power cable type shown in the following below:

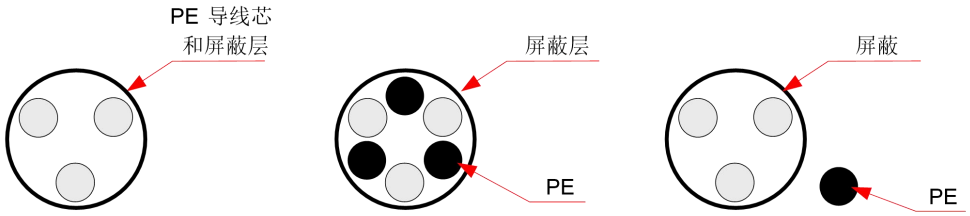

Figure 2-19 Recommended power cable type

The shielding layer of the main loop input / output side cable of the servo drive is grounded with the PE terminal on the drive (please refer to the following figure below for wiring).

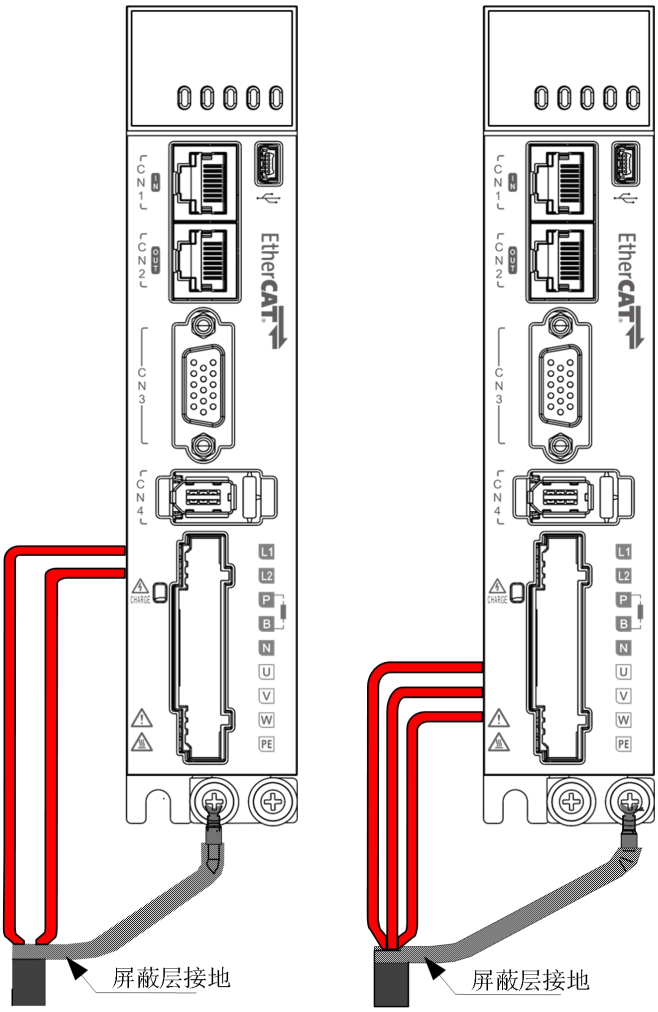

Figure 2-20 Input / output side power cable shielding layer wiring

The following matters should also be noted when selecting the output side cable of the servo drive:

- Do not connect the capacitor or surge absorber, otherwise it will cause the servo drive to often protect or even damage;
- When the motor cable is too long, due to the influence of distributed capacitance, it is easy to produce electrical resonance, which will cause the motor insulation damage or produce large leakage current to protect the servo drive overcurrent; when the motor cable length is greater than 100m, the AC output reactor must be installed near the servo driver;
- The output motor cable is recommended to use the shielding line, the shielding layer needs to do 360° lap on the structure, and the lead line of the shielding layer is pressed to the PE terminal;
- The shielding line of motor cable shall be as short as possible and the width b 1 / 5 · a (referencegraph 2-28Shown).

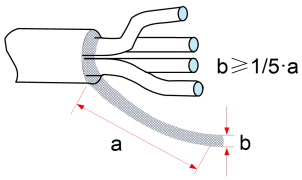

Figure 2-21 Schematic drawing of motor cable shielding

(2) Encoder cable requirements

Encoder cables must be shielded twisted pair.

(3) The USB cable requirements

- For the connector on the drive side, please use the marketed USB mini-B that meets the computer specifications;
- Use of shielded USB cables;
- When using cables without filtering measures, install signal ferrite magnetic rings at both ends of the cable.

(4) Cable layout requirements

Cable routing needs to pay attention to the following matters, and it is recommended to use itgraph 2-29Line walking form and arrangement spacing:

- Motor cable wiring must be far away from other cable wiring. Motor cables of several drives can be wired side by side;
- It is recommended to place motor cables, input power cables, control cables and encoder cables in different slots. In order to avoid the electromagnetic interference caused by the rapid change of the driver output voltage, the motor cables and other cables should be avoided by running for a long distance side by side;
- When the control cable must pass through the power cable, ensure that the Angle between the two cables is as 90 degrees as possible. Do not pass any other cables through the drive;
- The power input and output lines of the driver and the weak electrical signal lines (such as control lines) should not be arranged in parallel as far as possible, and vertically arranged when conditions permit;
- The cable grooves must be well connected and well grounded. Aluminum wire grooves can be used to improve the equipotential.

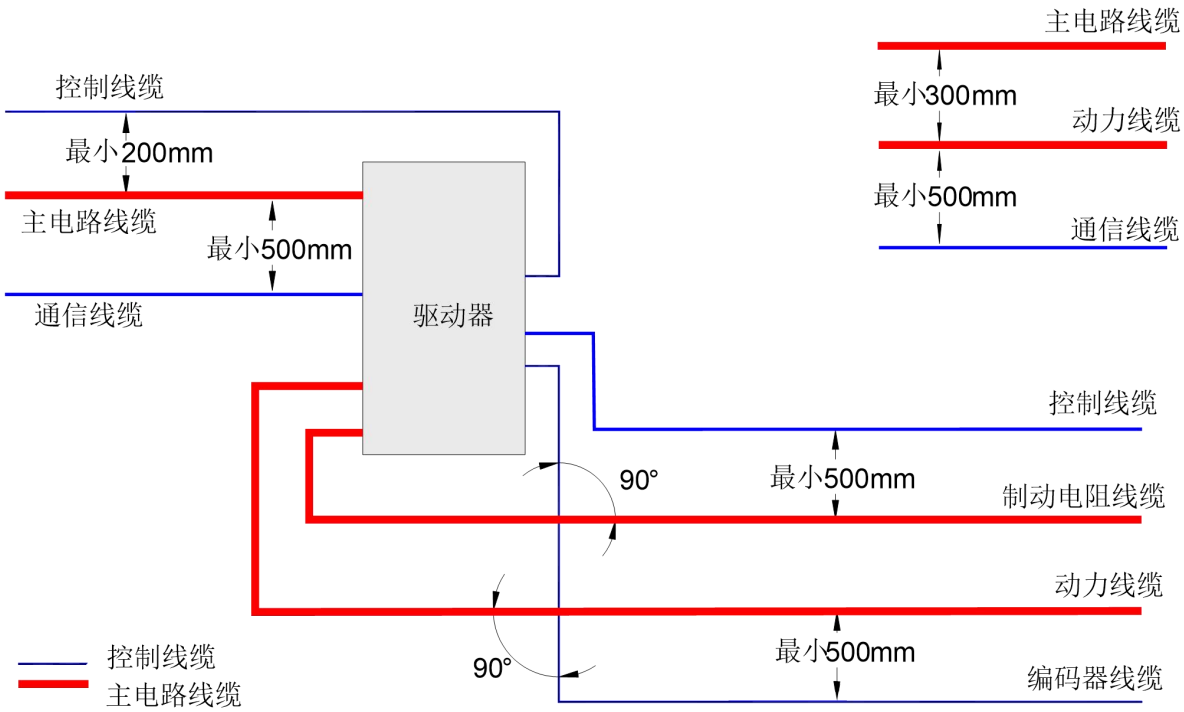

Figure 2-22 Recommended cable layout drawing

2.9.6 Input / output magnetic loop selection

In order to reduce the interference to adjacent devices, it is recommended to add a filtered magnetic ring to the three-phase input / output power line of the servo driver:

- Input cable away from the servo drive installation;
- The output cable is installed near the servo drive.

The following table is the recommended magnetic ring manufacturer model.

Table 2-12 Recommended magnetic ring manufacturer model

outside drawing	Magnetic ring manufacturer model	Size (OD ID thickness) (mm)
	DY644020H	64×40×20
	DY805020H	80×50×20
	DY1207030H	120×70×30

2.9.7 Common EMC problem-solving recommendations

Servo drive products belong to strong interference equipment, which may occur in the use process because of wiring, grounding, protection and other problems. The following methods can also be used to rectify the phenomenon of mutual interference with other equipment.

Table 2-13 Common EMC problems and handling methods

Interference type	Rectification method
Leakage protection circuit breaker switch trip	Without affecting the performance, reduce the load frequency; Reduce the drive line length; Add a magnetic ring to the input drive line (not around the PE line); For instantaneous trip, the large input terminal capacitor shall be disconnected; (disconnect the ground end of the external or built-in filter and the ground end of the Y capacitor of the input port); For operation or enabling trip, leakage current suppression measures (leakage current filter, safety gauge capacitor + magnetic loop, magnetic loop) should be installed at the input end;
Drive operation causes interference	The motor housing is connected to the driver PE terminal; Drive PE terminal is connected to the power grid PE; Input the power wire to orbit the magnetic loop; Add the capacitance or surround the magnetic ring to the disturbed signal port; Add additional common ground connection between the equipment;
communications jamming	The motor housing is connected to the driver PE terminal; Drive PE terminal is connected to the power grid PE; Input the power wire to orbit the magnetic loop; Communication line source and load end add matching resistance; Communication line difference line pair plus communication public ground line; The communication line uses the shielding line, and the shielding layer is connected to the public communication place; Multi-node communication wiring needs to use the chrysanthemum chain mode, the length of the branch line is less than 30cm;
I/O disturb	Low speed DI increase capacitance filter, recommended maximum 0.1 uF; AI increases the capacitance filter, with the recommended maximum of 0.22 uF;

2.10 Overall wiring diagram

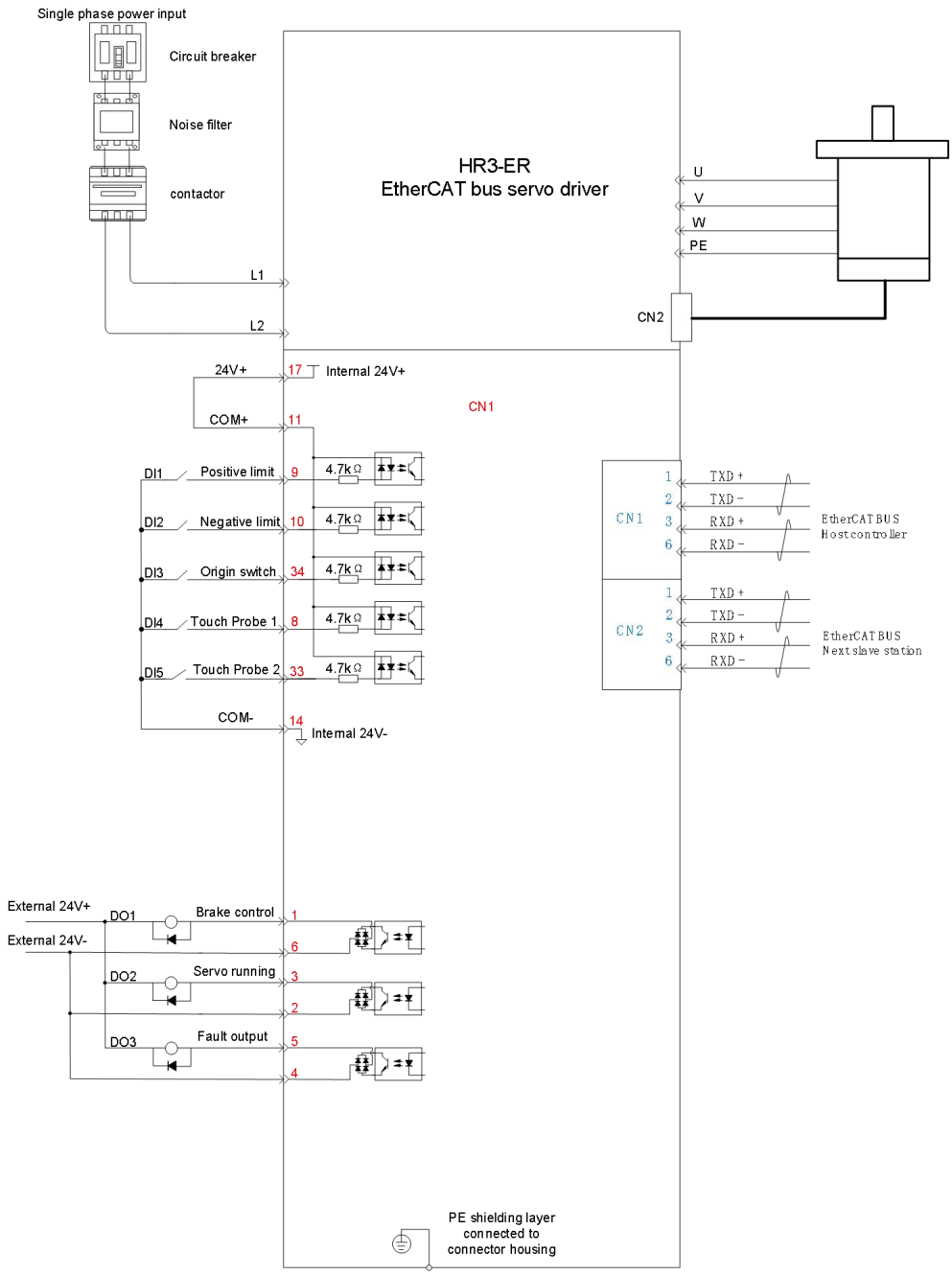

- Internal +24V power supply, voltage range: 20 to 28 V, maximum output current: 200 mA.
- The DI input power supply needs to be external, with a supply voltage range of 12-24VDC and a maximum of 30VDC.
- A user needs to provide the power supply for DOs, with voltage range 5 – 24 V. The DO terminals support 30 VDC voltage and 50 mA current to the maximum.
- Use the shielded twisted pair as the encoder fre-quency-division cables, with both ends of the shielded layer tied to PE. Connect GND to the signal ground of the host controller reliably.

3 commissioning test

3.1 Basic operation setting

3.1.1 Motor adjustment

Before the servo system, input motor parameters and identify pole identification.

This section is a description of the panel operation process, and see the background operation instructionsSection 3.3 DriverStart Used。

(1) Input of motor parameters

The setting mode of motor parameters is shutdown, and the effective mode is power again. The motor parameters are listed as follows:

Table 3-1 List of motor parameters

name	FC	unit	initial value	least value	crest value
rated voltage	P00.10	V	0-220V	0-220V	655.35
rated current	P00.11	A	4.70	0	655.35
power rating	P00.12	kW	0.75	0	655.35
nominal torque	P00.13	Nm	2.39	0	42949672.95
maximum torque	P00.15	Nm	7.16	0	42949672.95
rated speed	P00.17	rpm	3000	0	65535
maximum speed	P00.18	rpm	6000	0	65535
Motor inertia	P00.19	Kg·cm^2	1.30	0	42949672.95
number of pole-pairs	P00.21	-	4	0	65535
phase resistance	P00.22	Ω	0.500	0	65.535
inductance Lq	P00.23	mH	3.27	0	655.35
inductance Ld	P00.24	mH	3.87	0	655.35
Anti-potential	P00.25	mV/rpm	33.30	0	655.35
D-axis reverse potential compensation	P00.31	%	60.0	0.0	6553.5
The Q-axis antipotential compensation	P00.32	%	100.0	0.0	6553.5
Current sampling and extraction rate	P00.33	-	0-Extraction rate of 32	0-Extraction rate of 32	3-with a draw rate of 256
A D-axis proportional gain of 1	P00.34	Hz	2000	0	65535
The D-axis integration gain of 1	P00.35	%	2.00	0.00	655.35
A Q-axis proportional gain of 1	P00.36	Hz	2000	0	65535
The Q-axis	P00.37	%	1.00	0.00	655.35

integration gain of 1					

3.1.2 Lock setting

The lock is used to stop the unexpected movement of the moving load (such as falling under gravity) when the servo system is not activated (such as the servo system power failure), to prevent the accidental movement of the servo motor due to its own weight or external force.

⚠ pay attention to:

- The lock mechanism is a fixed special mechanism of non-power action, can not be used for braking purposes, only when the servo motor keeps a stop state;
- Unlock coil polarity;
- After the servo motor is stopped, the servo enabling capacity should be closed;
- When the motor of the built-in lock is running, the lock may make a clicking sound, and the function is not affected;
- When the brake coil is energized (when the lock is open), magnetic flux leakage may occur at the shaft end and other parts. When magnetic sensors and other instruments are used near the motor, please pay attention to the possibility of this situation.

(1) Lock parameter setting

For applications with lock, the lock enabling switch (P05.12) must be enabled and one of the servo drive DO terminals is configured as function 17 (BK, lock control) and the valid logic of the corresponding DO terminal must be determined.

According to the current state of servo drive, the working sequence of lock mechanism can be divided into two types: the normal state of servo drive and the fault state of servo drive.

Table 3-2 P05.12 Lock-holding enable switch index code

P05.12-Holding the lock enabling switch	
Index-sub-index	0x2005-0D
data type	UINT16
accessibility	Readable / scripted
unit	-
Windows default	1
least value	0
crest value	1
Set and effective mode	Run Set / Effective immediately
Related mode	-
explanatory note	-

Table 3-3 Lock output function number

code	name	function name	function
17	BK	Lock control	Invalid, the switch power supply is connected, the switch action, the motor is in the position lock state; Effective, the lock power supply is off, the lock is off, the motor can move;

(2) Holding timing of normal state of servo drive

The normal state of lock timing can be divided into two conditions: motor stationary and motor motion:

- Still: the actual motor speed is less than 30rpm;
- Movement: the actual rotational speed of the motor reaches 30rpm and above.

① Lock timing when the servo motor is stationary

- When the servo capacity is converted from ON to OFF, if the current motor speed is less than 30rpm, the driver moves according to the static lock timing sequence;
- After the lock output is set from OFF to ON, do not enter the position / speed / torque instruction during P05.13, otherwise it will be lost or run error;
- When used in the vertical axis, the mechanical motion body weight or external force may cause slight mechanical movement. When the servo motor is still, the servo enables OFF occurs, and the lock output immediately becomes OFF, but during P05.14, the motor is still energized to prevent the mechanical movement part from moving due to dead weight or external force.

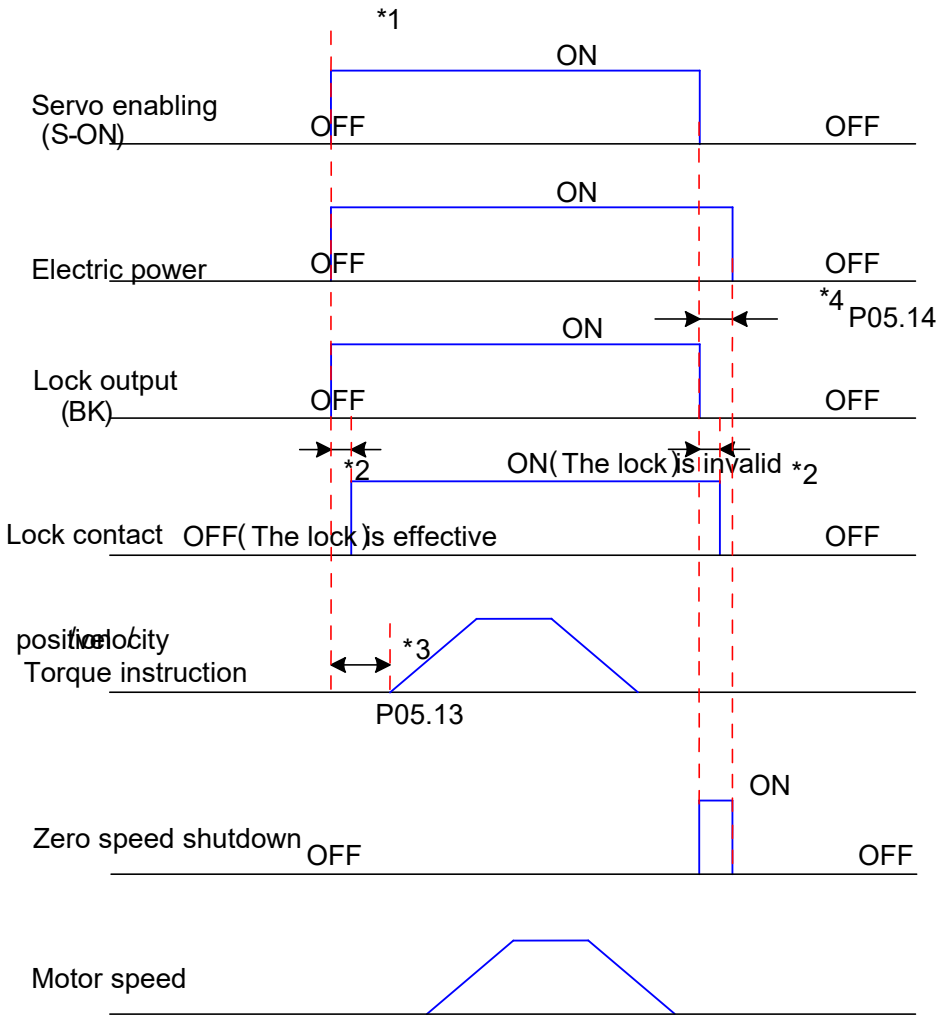

Figure 3-2 Timing diagram of holding the lock when the motor is stationary

* 1. When the servo enables ON, the output of the lock is set as ON, and the motor enters the power state;

* 2. Please refer to the relevant specifications for the delay time of the lock contact part action;

* 3. Set the lock output to ON to the input instruction, please interval above P05.13;

* 4. Under the static condition of the servo motor (the motor speed is lower than 30rpm), when the servo enables OFF, the lock output is set as OFF at the same time. P05.14 can set the delay of the lock output OFF, and the motor enters the non-energized state.

Table 3-4 P 05.13 Hold the lock to the receiving command delay (stop state) index code

P05.13-Hold the brake loose brake to receive the command delay	
index of matrix	0x2005-0E
data type	Uint16
accessibility	Readable / scripted
unit	ms
Windows default	250
least value	0
crest value	500
Set and effective mode	Run Set / Effective immediately
Related mode	-
explanatory note	-

Table 3-5 P 05.14 Hold zero speed hold time (stop state) index code

P05.14-Holding lock suction zero speed holding time	
index of matrix	0x2005-0F
data type	Uint16
accessibility	Readable / scripted
unit	ms
Windows default	150
least value	1
crest value	1000
Set and effective mode	Run Set / Effective immediately
Related mode	-
explanatory note	-

② Holding timing of the servo motor during movement

- When the servo enables the conversion from ON to OFF, if the current motor speed is greater than or equal to 30rpm, the driver moves according to the motion lock sequence.
- When servo enable is set from OFF to ON, do not enter position / speed / torque instruction during P05.13, otherwise it will cause instruction loss or run error;
- When the servo motor moves, the servo enabling OFF occurs, and the servo motor enters the zero-speed stop state, but the lock output needs to meet any of the following conditions before being set to OFF.
  I. P05.16 Time has not arrived, but the motor has slowed down to P05.15;
  Ⅱ. P05.16 time has arrived, but the motor speed is still higher than P05.15.
- After the switch output changes from ON to OFF, the motor is still in the power state within 50ms to prevent the mechanical movement part from moving due to dead weight or external force.

Figure 3-3

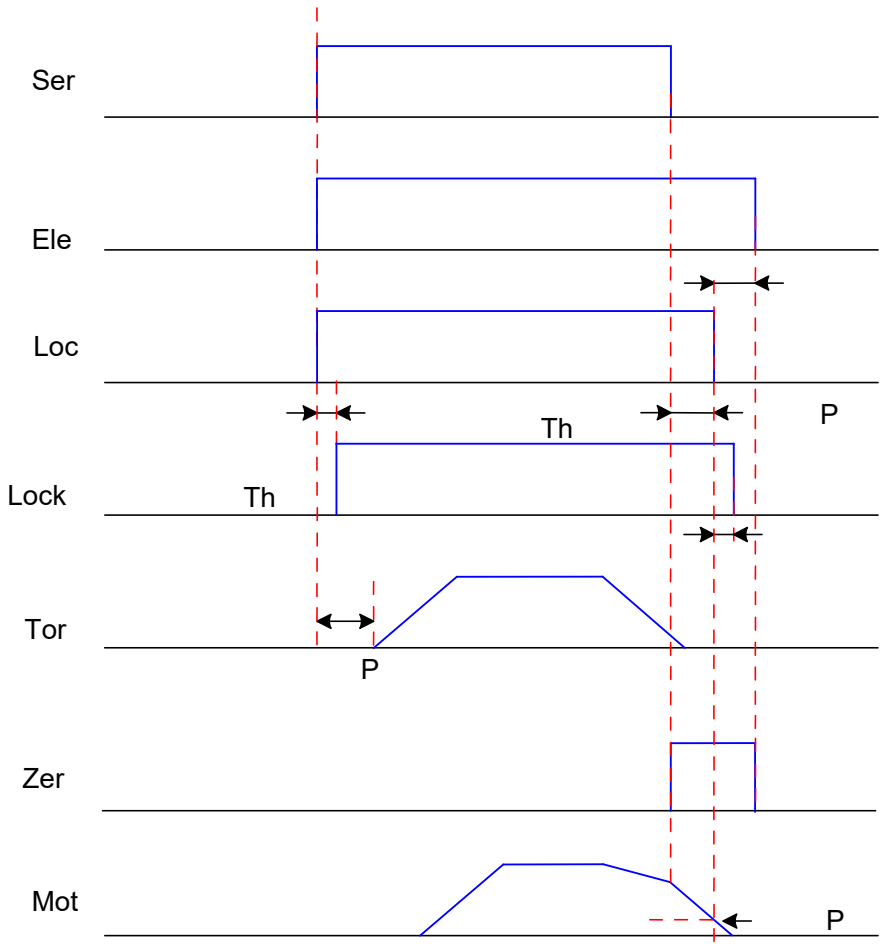

Figure 3-4 Timing diagram of holding the lock during motor movement

* 1. When the servo enables ON, the output of the lock is set as ON, and the motor enters the power state;

* 2. Please refer to the relevant specifications for the delay time of the lock contact part action.

* 3. Set the interval from the lock output to ON to the input instruction, please be above P05.13.

* 4. Under the servo motion of the servo motor, when the servo enables OFF, the delay of the servo enabling OFF can be set through P05.15 and P05.16. After the delay of the output OFF of the brake is 50ms, and the motor can enter the non-power state.

Table 3-6P05.15 suction speed threshold

P05.15-Hold the lock suction speed threshold	
index of matrix	0x2005-10
data type	Uint16
accessibility	Readable / scripted
unit	rpm
Windows default	30
least value	0
crest value	3000
Set and effective mode	Run Set / Effective immediately
Related mode	-
explanatory note	-

Table 3-7P 05.16 Lock and closing time threshold index code

P05.16-Lock suction time threshold	
index of matrix	0x2005-11
data type	Uint16
accessibility	Readable / scripted
unit	ms
Windows default	500（ms）
least value	1
crest value	1000
Set and effective mode	Run Set / Effective immediately
Related mode	-
explanatory note	-

(3) Holding timing of servo drive fault state

Servo faults are divided into type 1 (NO.1) and type 2 (NO.2). Please see"Chapter 5 Fault and Warning Handling"。The timing of servo driver fault can be divided into the following two situations:

① A Type-1 failure has occurred

The DO output condition of the lock is the same as "the lock timing of servo motor movement under normal state of servo drive". That is, the lock output shall meet any of the following conditions before being set as OFF:

I. P05.16 Time has not arrived, but the motor has slowed down to P05.15;

Ⅱ. P05.16 time has arrived, but the motor speed is still higher than P05.15.

② A Type-2 failure has occurred

When the type 2 failure occurs and enables the brake, the type 2 failure shutdown mode is forced to be "zero speed shutdown, free operation state".

At this time, the servo motor first stops at zero speed. When the actual speed of the motor is lower than 30rpm, the DO output condition of the switch is the same as the timing when the servo motor is static, that is, the output of the switch immediately becomes OFF, but in P05.14, the motor is still powered on. 14.

3.1.3 Run direction selection

By setting the running direction, the running direction of the motor can be changed without changing the polarity of the input instruction. After the modification, the servo should be repowered before effective.

When "running direction selection" changes, the shape of the servo drive output pulse and the positive and negative of the monitoring parameters will not change.

The "forward drive" is consistent with the "Motor Running Direction Selection (P04.01)" setting.

Running direction setting can select the object word: "2004-02h", or panel setting "P04.01", or background software setting "P04 group-motor motion direction selection".

Table 3-8 P04.01 Selection of motor running direction

P04.01-Motor running direction selection	
Index-sub-index	0x2004-02
data type	UINT16
accessibility	Readable / scripted
unit	1
Windows default	0
least value	0
crest value	1
Set and effective mode	Shutdown setting / power-on again
Related mode	ALL
explanatory note	Set the positive direction of the motor operation when observed from the motor shaft side.

3.1.4 Absolute value function

(1) Instructions for absolute values

The absolute value encoder can record the single loop position of servo motor and the number of servo motor motion circles, The single-circle resolution is 1048576, Record information of 16 bits of 65535, The absolute value encoder backs up the location information when the upper servo drive is powered down, The mechanical absolute position can be calculated without rereturning the origin (when the servo driver uses an incremental encoder, The position feedback is 0, Find the point where the positional feedback is really 0, So that the servo motor in the mechanical equipment correct operation; While after using the absolute value encoder, After re-power, The correct location feedback value is calculated based on the information from the encoder backup).

⚠ pay attention to:

- HR3 series servo drives support absolute position linear mode and absolute position rotation mode, suitable for position, speed, torque mode;
- When the E. 917 encoder battery fault occurs during the first battery connection, the P20.05=1 reset encoder fault should be set, and then the origin return operation;
- Modify P04.01 running direction selection, need to rethe origin;
- In absolute position mode, the servo automatically detects whether the motor number is absolute encoder motor. E.019 (Encoder matching fault).

(2) Absolute-value system-related objects

Function selection objects:

Table 3-9 P04.02 Position feedback system selection

P04.02-Position feedback system selection	
Index-sub-index	0x2004-03
data type	UINT16
accessibility	Readable / scripted
unit	-
Windows default	0
least value	0
crest value	2
Set and effective mode	Shutdown setting / power on again
Related mode	ALL
explanatory note	Set the absolute value system set value: Absolute value system selection 0: Incremental mode 1: Absolute linear mode 2: Absolute rotation mode

Table 3-11 P20.05 Encoder reset

P20.05-Encoder reset	
Index-sub-index	0x2020-06
data type	UINT16
accessibility	Readable / scripted
unit	-
Windows default	0
least value	0
crest value	2
Set and effective mode	Shutdown setting / power on again
Related mode	-
explanatory note	The encoder reset set value: description 0: attonity 1: Reset fault 2: Reset the fault with the multi-loop data

Table 3-12 The encoder gives feedback on the parameter object

parameter reference	parameter	name	unit	scope	data type	accessibility	PDO
0x2009-2B	P09.42	Multiple of of encoder	shut in a pen	0-65535	UINT16	RO	-
0x2009-2C	P09.43	Encoder single-loop position	Encoder unit	0-(2^31-1)	INT32	RO	-
0x2009-2E	P09.45	The encoder absolute position is 32 bits lower	Encoder unit	(-2^31)-(2^31-1)	INT32	RO	-
0x2009-30	P09.47	The encoder absolute position is 32 bits higher	Encoder unit	(-2^31)-(2^31-1)	INT32	RO	-

pay attention to:

- P09.43 is the single loop position of the encoder, its range is 0 to the encoder resolution, if it is a 23-bit encoder, the range is 0- (2 ^ 23-1);
- P09.42 and P09.43 are the feedback data of the encoder;

Since P09.42 is an unsigned number, the absolute position of the absolute value encoder is calculated as follows:

$$Absolute\ Encoder\ position\ = P09.42 \times Encoder\ resolution\ + P09.43(\mathrm{P09.42} <\ 32768)$$
$$Or$$
$$Absolute\ Encoder\ position\ = (\mathrm{P09.42} - 65536) \times Encoder\ resolution\ + \mathrm{P09.43}(P09.42 \geq\ 32768)$$

- P09.45 and P09.47 are used to display the absolute position of the encoder. The calculation formula is as follows: absolute absolute position of the encoder = P09.472$^{32+\ P09.45}$。

(3) Absolute value system use considerations

- E.917 (encoder battery fault) occurs when the battery is connected for the first time, the P20.05=1 reset encoder fault should be set, and then the absolute position system operation;
- When the battery voltage is less than 3.0V, E.921 (encoder battery warning) will occur, please replace the battery, please ensure that the servo driver is on but not running;
- If the servo drive fails, the battery falls off or if the battery is replaced, please use the P20.05=1 reset encoder fault, and then restart the origin;

- When the servo driver loses power, the maximum speed of the motor shall not exceed 6000rpm, otherwise, the encoder position information may be recorded correctly;
- Please ensure that the battery level and storage conditions do not damage the battery.

3.1.5 Electronic gear ratio setting

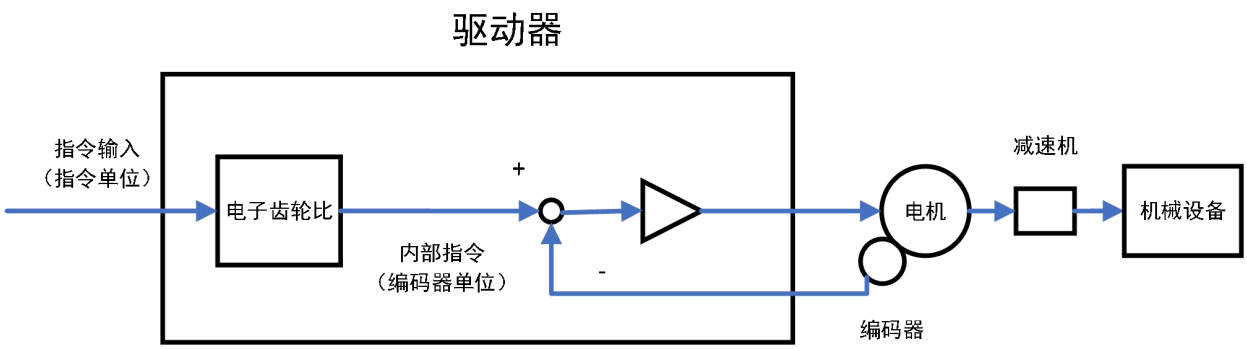

Figure 3-5 Electronic gear ratio

Electronic gear ratio: Electronic gear ratio is the analog gear, which plays the role of converting the control command (command unit) into the actual displacement of the motor (encoder unit), which can be expressed by the following formula:

$$Encoder\ unit\ =\ instruction\ unit\frac{Electronic\ gear\ ratio\ molecules}{Electronic\ gear\ score\ mother}$$

Note: The control variables (non-state feedback variables) in the object dictionary are all taking the instruction unit as the basic unit. If the electronic gear ratio is set to 1:1, the 1 encoder unit is equal to 1 instruction unit.

Table 3-13 0x6091 electronic gear ratio

0x6091-Electronic gear ratio		
Index-sub-index	0x6091-01	0x6091-02
data type	UINT32	
accessibility	RW	RW
unit	-	-
Windows default	1	1
least value	0	0
crest value	2^{32-1}	2^{32-1}
Set and effective mode	Operation setting / shutdown takes effect	Operation setting / shutdown takes effect
Related mode	CSP/PP/HM/CSV/PV	
explanatory note	6091-01h: electron gear ratio molecule 6091-02h: electronic gear score parent	

3.1.6 move

(1) Pre-run check

Table 3-14 Pre-run check step

item	content
Wiring inspection	1) Motor power line UVW line order (special attention) 2) Whether the ground wire is loose or short circuit to UVW 3) Whether the encoder cable is loose
Mechanical connection check	Check whether the mechanical part connected to the motor has strict requirements on the movement direction of the motor. It is recommended that the motor is no load before the "safe operation" step
Environmental inspection	Do not run the motor at high temperature and high humidity

(2) safe in operation

Table 3-15 Safe operation steps

step	description
Power is switched on, and the confirmation panel displays	After the servo controller is powered on, the second panel shows ry in the normal state. If the panel flashes the alarm code, please conduct troubleshooting according to Chapter 5
slow running	1) on the basis of3.2.2Panel point run drive motor 2) Observe the direction of the motor movement. If the direction is wrong, please stop driving the motor movement, according to3.2.1**The panel describes the test drive parameters** 3) Using the DriverStart oscilloscope, observe the velocity waveform, if the velocity is wrong, follow3.1.5Check the electronic gear ratio setting or correct the upper gear unit conversion

(3) move

Table 3-16 Run the steps

item	description
ganging	Please connect the motor to the load after the multi-diaphragm coupling is recommended
Usage recognition	Use the inertia recognition function to set the correct inertia ratio
gain adjustment	Adjust the gain parameters, filter parameters, and advanced adjustment parameters to achieve high precision and high response speed control
Run under program	Use the drive for the device, write the control program, and complete the specific functions

3.1.7 halt

In order to meet the servo drive and meet various working conditions, the servo drive supports different shutdown modes and shutdown states.

(1) Downtime method

- Free shutdown: the servo motor is not electrified, the motor is subject to mechanical friction to reduce the speed to 0;
- DB shutdown: reverse braking torque shutdown provided by UVW three-phase short connection under servo motor motion;
- Slope stop: smooth stop according to the pre-specified position / speed / current slope command;
- Zero speed shutdown: immediately put the motor target speed to zero for shutdown;
- Emergency torque stop: the servo driver output the reverse braking torque and quickly reduce the motor speed to 0.

(2) stopped state

- Maintain position state: keep the motor position, motor shaft is not move.
- Maintain DB state: the drive is short connected to UVW three-phase wire, and the motor shaft can not move freely;
- Free motion state: the motor can move at will.

(3) Downtime condition

The shutdown conditions supported by the servo drive are as follows:

Table 3-17 HR3 series servo drive shutdown mode

Downtime condition	Related parameter setting		Shuand action and status	description
Class I failure shutdown	P04.10	0	Free downtime, free movement	Stop condition when the type I fault occurs
		1	DB downtime, free movement	
		2	DB down, to the DB	
Class II fault shutdown	P04.11	0	Free downtime, free movement	Downtime condition when the second type of fault occurs
		1	Zero-speed shutdown, free movement	
		2	Stop at zero speed and maintain the DB	
		3	DB downtime, free movement	
		4	DB shutdown and maintain the DB	
Disconnect shutdown mode	P04.12	0	Free shutdown	Downtime condition when the servo drive is disabled
		1	DB halt	
		2	Zero speed shutdown	
Disabling the shutdown state	P04.13	0	free motion	
		1	keep DB	
Off the power shutdown	P04.14	0	Stop according to the disabled enabling	Downtime when servo drive is power

			mode	
		1	Zero speed shutdown	
Override shutdown	P04.15	0	Free downtime, free movement	When the motor shaft position exceeds the preset position, the shutdown position can be the servo internal software position limit value or the external limit DI trigger time position
		1	Stop at zero speed and keep it in its position	
		2	Zero-speed shutdown, free movement	
Quick shutdown	605Ah	The shutdown mode is different in each motion mode. For details, please see the object dictionary 605Ah		Stop condition when the control word 6040h fast downposition is valid
suspend	605Dh	The shutdown mode is different in each motion mode. For details, please see the object dictionary 605 Dh		Downtime condition when the control word 6040h is valid

Table 3-18 0x605A quick shutdown mode selection

0x605A-Quick shutdown mode selection	
Index-sub-index	0x605A-00
data type	UINT16
accessibility	Readable / scripted
unit	-
Windows default	2
least value	0
crest value	7
Set and effective mode	Operation setting / shutdown takes effect
Related mode	ALL
explanatory note	Fast shutdown, when biS 2 of control word 6040h is valid, quick shutdown will be performed. Under the same setting value, different shutdown modes are different as shown in the following table:

PP：

set value	description
0	Free shutdown, keep the free running state
1	Stop at 6084h ramp for free operation
2	Stop at 6085h slope and maintain the free operation state
3	P04.23 and maintain free operation
4	NA
5	Stop at 6084h ramp and keep the position locked state
6	Stop at 6085h ramp and keep the position locked state
7	P04.23 and keep the position locked

CSP：

set value	description
0	Free shutdown, keep the free running state
1	P04.23 and maintain free operation
2	
3	
4	NA
5	P04.23 and keep the position locked
6	

7	

PV/CSV/HM

set value	description
0	Free shutdown, keep the free running state
1	Stop at 6084h (HM: 609Ah) ramp and maintain free operation state
2	Stop at 6085h slope and maintain the free operation state
3	P04.23 and maintain free operation
4	NA
5	Stop at 6084h (HM: 609Ah) ramp and keep the position locked state
6	Stop at 6085h ramp and keep the position locked state
7	P04.23 and keep the position locked

CST/PT

set value	description
0	Free shutdown, keep the free running state
1	Stop at 6087h ramp and maintain free operation state
2	
3	Free shutdown, keep the free running state
4	NA
5	Stop at 6087h ramp and keep the position locked state
6	
7	Stop freely and keep the position locked state

Table 3-19 0x605D, pause mode selection

0x605D-Pause mode selection	
Index-sub-index	0x605D-00
data type	UINT16
accessibility	Readable / scripted
unit	-
Windows default	1
least value	1
crest value	3
Set and effective mode	Operation setting / shutdown takes effect
Related mode	ALL
explanatory note	Pause, when the bit8 of the control word 6040h is valid, the pause will be executed. At the same set point, different modes will pause differently as shown in the following table:

PP：

set value	description
1	Stop at 6084h ramp and keep the position locked state
2	Stop at 6085h ramp and keep the position locked state
3	P04.23 and maintain free operation

CSP：

set value	description
1	P04.23 and keep the position locked
2	
3	

PV/CSV/HM

set value	description

	1	Stop at 6084h (HM: 609Ah) ramp and keep the position locked state
	2	Stop at 6085h ramp and keep the position locked state
	3	P04.23 and keep the position locked

CST/PT

set value	description
1	Stop at 6087h ramp and keep the position locked state
2	
3	Stop freely and keep the position locked state

3.2 Panel control operation

3.2.1 Panel introduction

(1) Panel composition

The HR3 series servo panel consists of keys and digital tube display, which can be used for information and parameter display, parameter setting, user password setting and general function execution.

(2) Keynote introduction

See the following figure of each key:

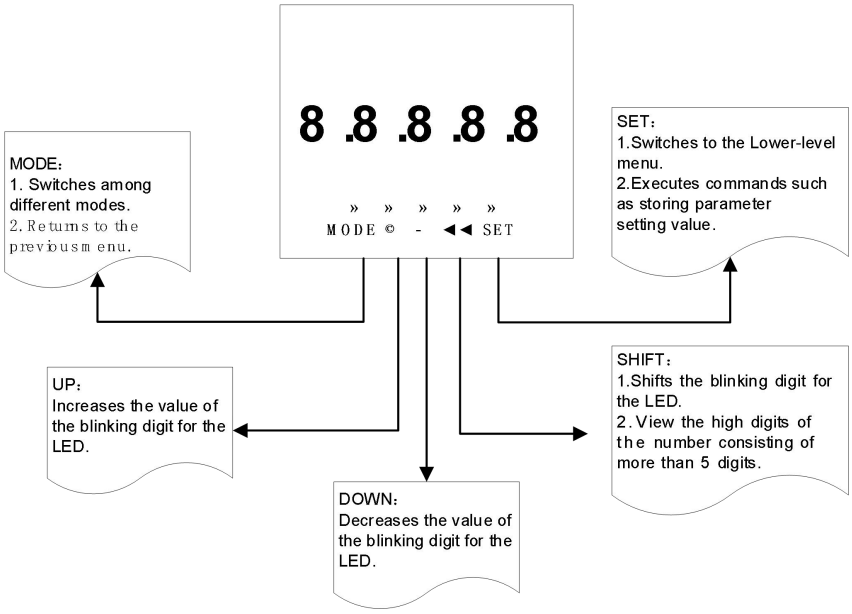

Figure 3-6 Introduction of key function

Ex: Use panel keys to jog at a speed of 300rpm.

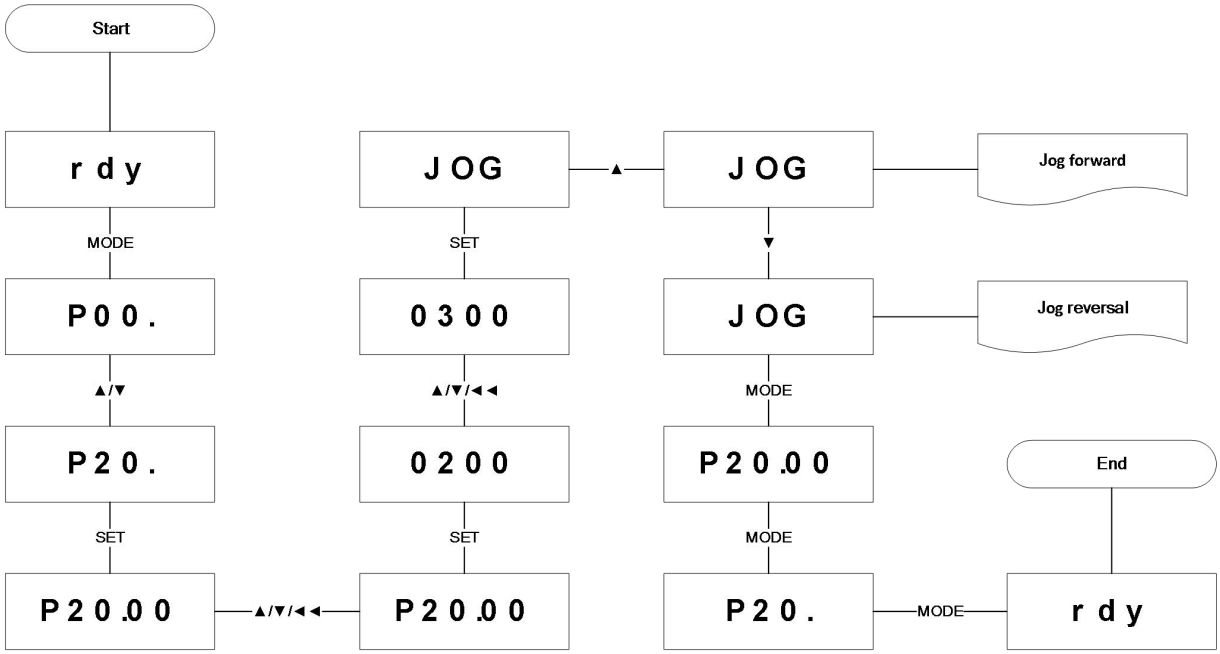

(3) Panel display presentation

The panel display consists of 5-bit 7-segment digital tubes. When the servo drive is running, the display can be used for the servo status display, parameter display, fault display and monitoring display.

① Panel display category

Table 3-20 Panel display category

Displays the category	functional description	mode of entrance	give an example
situation display	Show the current state of the servo, such as servo preparation, servo is running, etc	1. When the power supply is on, enter immediately; 2. Under the parameter display, press the MODE key and then enter; 3. Under the monitoring display, enter when the motor is static;	Rowwo
Parameter display	Display the function code and its set point	1. Under the status display, press MODE to enter; 2. After the monitoring display, press the MODE key to enter; 3. Under the fault display, press SET key first, and then press MODE key to enter;	P20.00
Fault display	Displays the fault and warning codes for the servo	1. Under the parameter display, press MODE and enter; 2. Enter when the fault occurs;	E . 910 . 1
Monitoring display	Displays the servo	1. Under the parameter display, set the function code to 21 groups before entering; 2. Under the state display, set the function code P05.03, and enter after the motor movement;	200

3.3 DriverStart Use it at the same time

DriverStart Is a debugging software for the HR3 series of servo drives.

3.3.1 summary

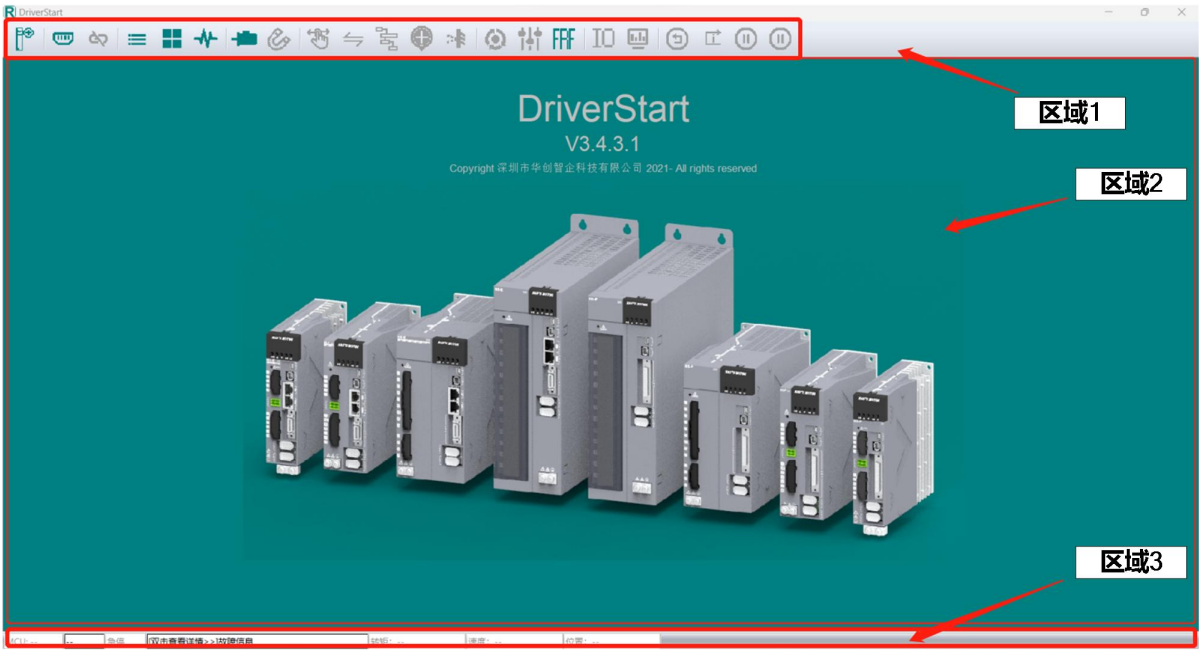

Figure 3-7 main interface

The software is divided into three regions, as shown below:

Area 1: Toolbar area, servo debugging function entrance, the user can click the relevant button to enter the corresponding function window;

Area 2: function view layer, debug function rendering area;

Area 3: status bar area, display the equipment status in real time; whether it is online, running status, fault information, motor operation information, etc.;

3.3.2 Java runtime environment Java

This software is a green installation-free version.

- service requirement

hardware environment:PC

Operating system: Windows7 x86 & 64, Windows10 x64, and Windows11 x64

Dependency: Net Framework 4.5 and above

3.3.3 Parameter management

Click the toolbar for the function code parameter setting interface.

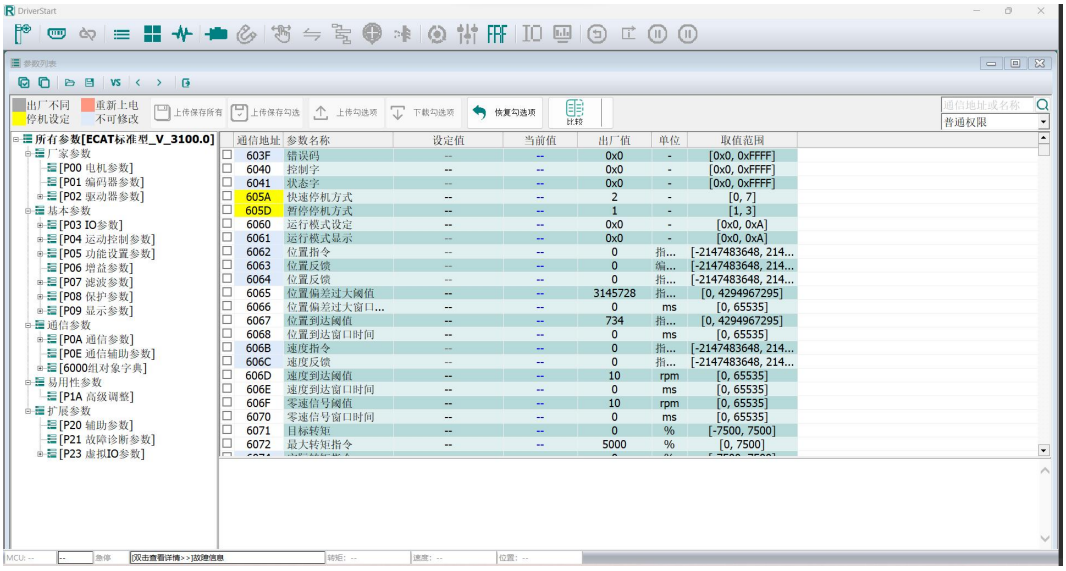

Figure 3-8 List of parameters

- Toolbar area

: The current page function code is selected, not selected;

: Open and save the formula file, save the formula and only save the current page with the checked function code;

VS: Parameter formula comparison function, as shown below:

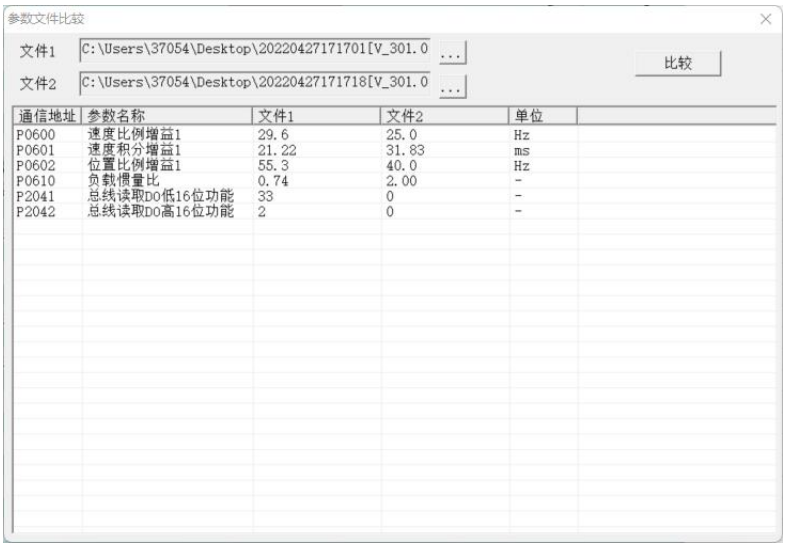

Figure 3-9 Parameter contrast

< > The previous editing group, the second editing group;

factory data reset;

- View area

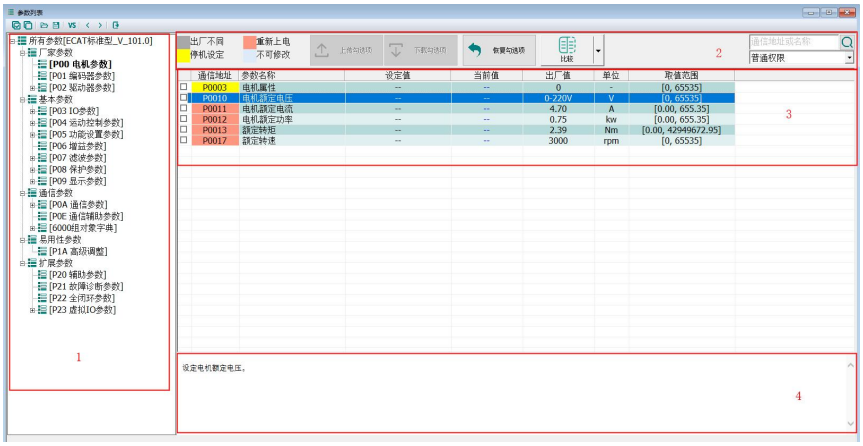

Figure 3-10 Parameter list view

1、 Function code grouping area: from the perspective of users, the function groups are divided, which is more convenient for users to use;

2、 operating space:

Upload option: Read the current page value from the drive and update to the Setpoint column;

Download hook option: Download the current page has checked the function code setting point to the drive;

Recovery check option: restore the checked settings column on the current page to the factory value;

: Function code search, support function code address, name, drop-down fuzzy query;

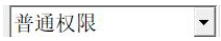

: Permission switch, support ordinary, administrator, manufacturer three kinds of authority, different permissions display function code is different, manufacturer authority for the manufacturer to use, do not recommend customers to use;

Parameter comparison function: supports three comparison methods: set value and factory value, set value and current value, current value and factory value. After clicking the comparison sub-item, enter the comparison view, and the user can click "Cancel comparison" to exit the comparison view;

3、 Functional code list area

List area, will display different background colors according to the function code attributes;

Setpoint: the user edparameters through this column, read-only parameter font ash cannot be modified;

Current value: after the user checks the real-time refresh, the current value column displays the drive value in real time;

4、 Help: the user mouse selects the function code line, and the help area displays the selected function code help information;

- Right-click menu: click the right mouse button in the parameter list area, support to select all the current page, cancel all the current page, read, write the function code, open, save the formula, and save the modified parameters and other shortcut operations.

Figure 3-11 Right-click menu

3.3.4 oscilloscope

- tool bar

: Open the waveform file, the file format is csv;

: Save the current waveform only file, the file format is csv;

: Display the current waveform area, screen capture, the picture format is bmp;

: Measurement function, click the button to measure the waveform of the AB interval by dragging the A and B cursor in the waveform area;

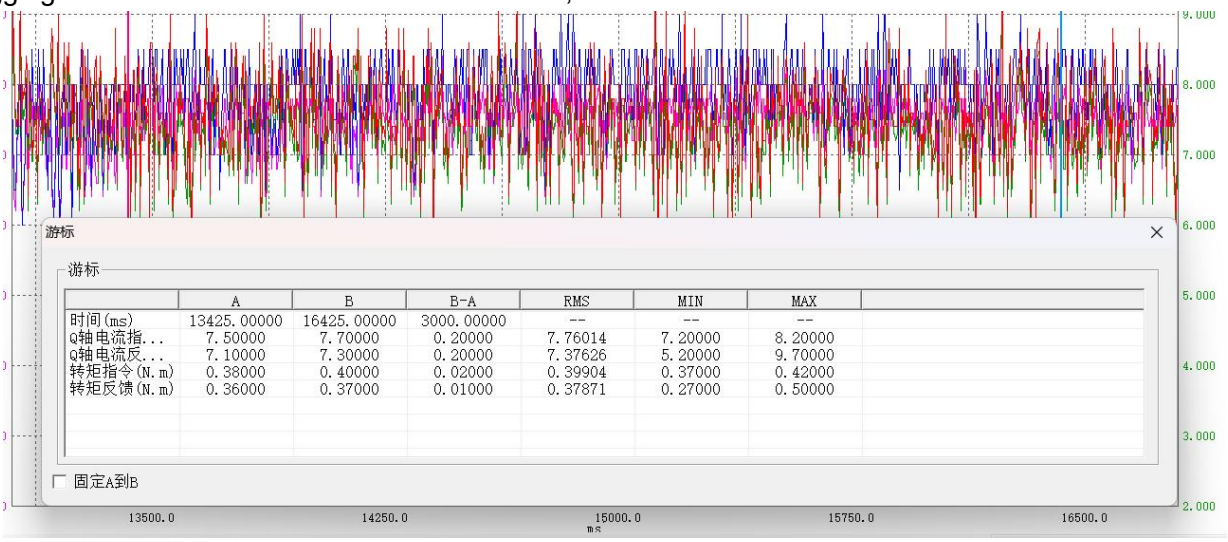

Figure 3-12 Cursor measurement

: Cursor function, after clicking the button, the mouse slides over the waveform area, display the current mouse position showing the value of each channel in the waveform;

: Waveform amplification, click the button to press the state amplification function, click the button again to select the waveform and enlarge the circle selection area;

: Waveform recovery, click the button, the waveform to return to the original state;

: Adaptive coordinate system, Click this button to automatically calculate the maximum minimum value of the waveform for ordinate adaptation;

: For FFT analysis, click the button and select the left mouse button to circle the waveform area. When the left mouse button is raised by the software for FFT analysis, the analysis results are displayed

and the three resonance point frequencies are identified, as shown in the figure below:

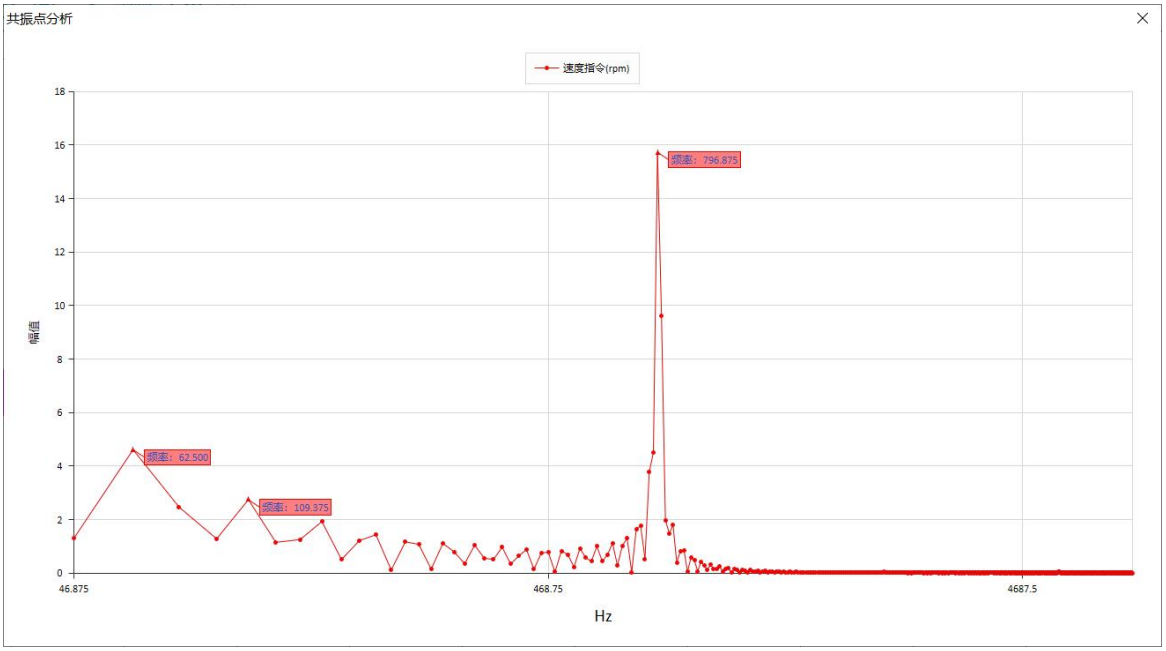

Figure 3-13 FFT resonance dot analysis

: For waveform comparison, click this button to select the waveform to compare. The waveform file in the file will be superimposed to the existing waveform area;

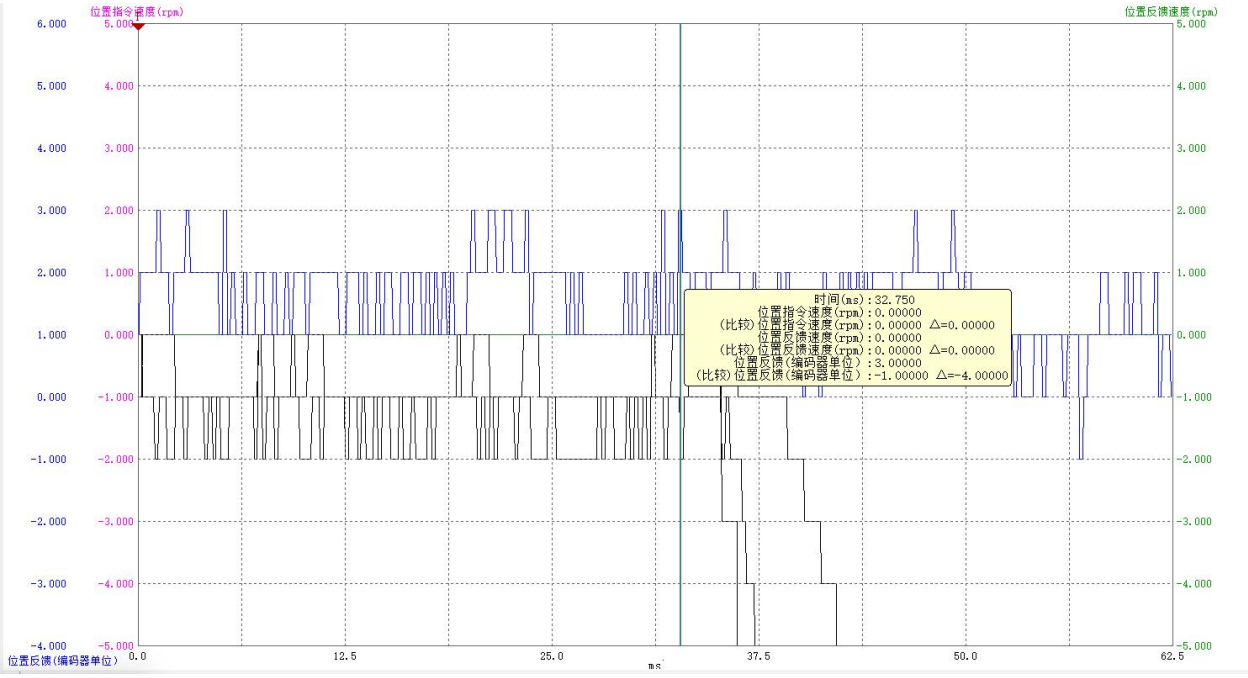

Figure 3-14 Waveform contrast

: Cancel the waveform contrast, click this button, and be deleted from the waveform area by the contrast waveform;

- configure

Channel configuration: The oscilloscope supports up to four channel acquisitions. Users can quickly generate the channel configuration in the corresponding mode through the three buttons of "Location acquisition", "Speed acquisition" and "Torque acquisition";

Sampling mode: support trigger and continuous sampling modes.

Trigger sampling: the accuracy can be 1 times the carrier frequency, but the number of sampling points is small (1024 points per channel). Users can click the "trigger condition" button to enter the trigger condition setting interface and set the trigger condition;

Continuous sampling: the continuous sampling accuracy is at the millisecond level, which supports long-time continuous sampling. During the sampling process, the waveform is automatically saved to the software directory "wavedata" directory.

Figure 3-15 Sampling configuration interface

3.3.5 initialise

(1) Motor parameter setting

Click the toolbar to set the motor encoder parameters interface:

通信地址	参数名称	设定值	出厂值	单位	取值范围
P0003	电机属性	0	0	-	[0, 65535]
P0010	电机额定电压	0-220V	0-220V	V	[0, 65535]
P0011	电机额定电流	4.70	4.70	A	[0.00, 655.35]
P0012	电机额定功率	0.75	0.75	kw	[0.00, 655.35]
P0013	额定转矩	2.39	2.39	Nm	[0.00, 42949672.95]
P0015	最大转矩	7.16	7.16	Nm	[0.00, 42949672.95]
P0017	额定转速	3000	3000	rpm	[0, 65535]
P0018	最大转速	6000	6000	rpm	[0, 65535]
P0019	电机惯量	1.30	1.30	kg...	[0.00, 42949672.95]
P0021	极对数	4	4	-	[0, 65535]
P0022	相电阻	0.500	0.500	Ω	[0.000, 65.535]
P0023	电感Lq	3.27	3.27	mH	[0.00, 655.35]
P0024	电感Ld	3.87	3.87	mH	[0.00, 655.35]
P0025	反电势	33.30	33.30	mv...	[0.00, 655.35]
P0026	转矩系数Kt	0.51	0.51	NA	[0.00, 655.35]
P0027	电气常数Te	6.54	6.54	ms	[0.00, 655.35]
P0028	机械常数Tm	0.24	0.24	ms	[0.00, 655.35]
P0031	D轴反电势补偿	60.0	60.0	%	[0.0, 6553.5]
P0032	Q轴反电势补偿	100.0	100.0	%	[0.0, 6553.5]
P0034	D轴比例增益1	2000	2000	Hz	[0, 65535]
P0035	D轴积分增益1	2.00	2.00	%	[0.00, 655.35]
P0036	Q轴比例增益1	2000	2000	Hz	[0, 65535]

Figure 3-16 Motor parameter management

- Open the file: the HR3 servo-related motor parameters have been integrated in the debugging software, and the user can directly select the formula corresponding to the motor model. As shown in the figure below, click the "Open" button after selecting the formula.

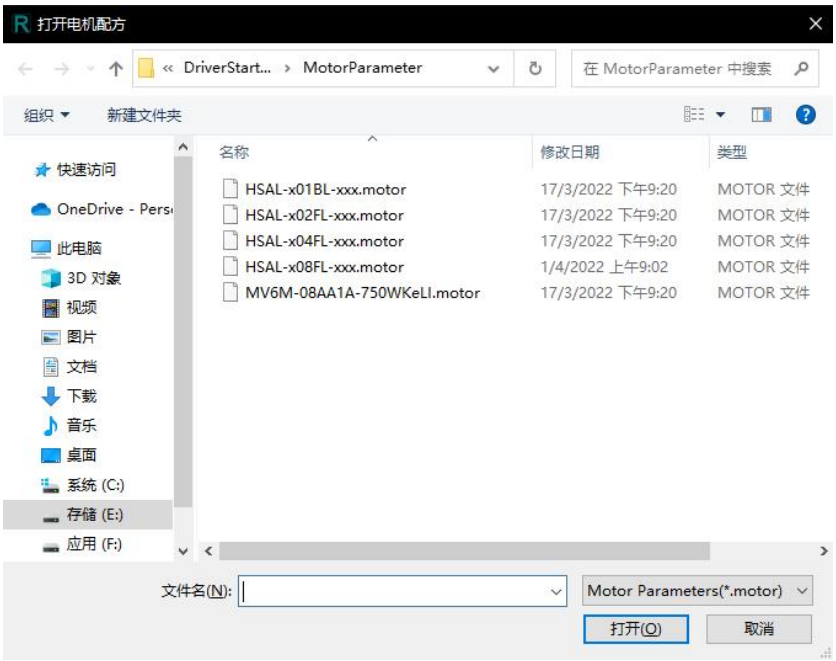

Figure 3-17 Turn on the motor parameter formulation

- Save the files: edit the parameters by editing the parameter value column, and click the "Save File" button to save the motor formula;

- Upload tick option: read all motor parameters from the encoder;
- Download option: select the parameters to download, click the "Download" button to download the motor parameters to the encoder.

(2) Magnetic electrode identification

This function is used to initialize the motor angle during the initial motor operation.

Click the toolbar to enter the magnetic pole identification interface:

Figure 3-18 Magnetic electrode identification

(3) DI\DO supervisory control

This function is used to display DI, DO function, status and pin wiring information, and supports force DI and DO output for DI and DO simulation.

Figure 3-19 DIDO supervisory control

3.3.6 pilot run

(1) velocity JOG

This function can be used to control the rotation of the motor to detect whether the motor can operate normally and whether there is any abnormal rotation.

Click on the toolbar to enter the speed JOG interface:

Figure 3-20 velocity JOG

The use steps are as follows:

1. Input motor running speed, acceleration and deceleration time parameters;
2. Click the enabling switch to enable the drive;
3. The left mouse button long press "Long press forward" and "Long press reverse" buttons to control the motor to go forward and reverse; release the mouse, stop running.

(2) position JOG

This function is mainly used to control the motor to operate at reciprocation or fixed distance at the specified speed in the specified operating limit position.

Click the toolbar to enter the location JOG interface:

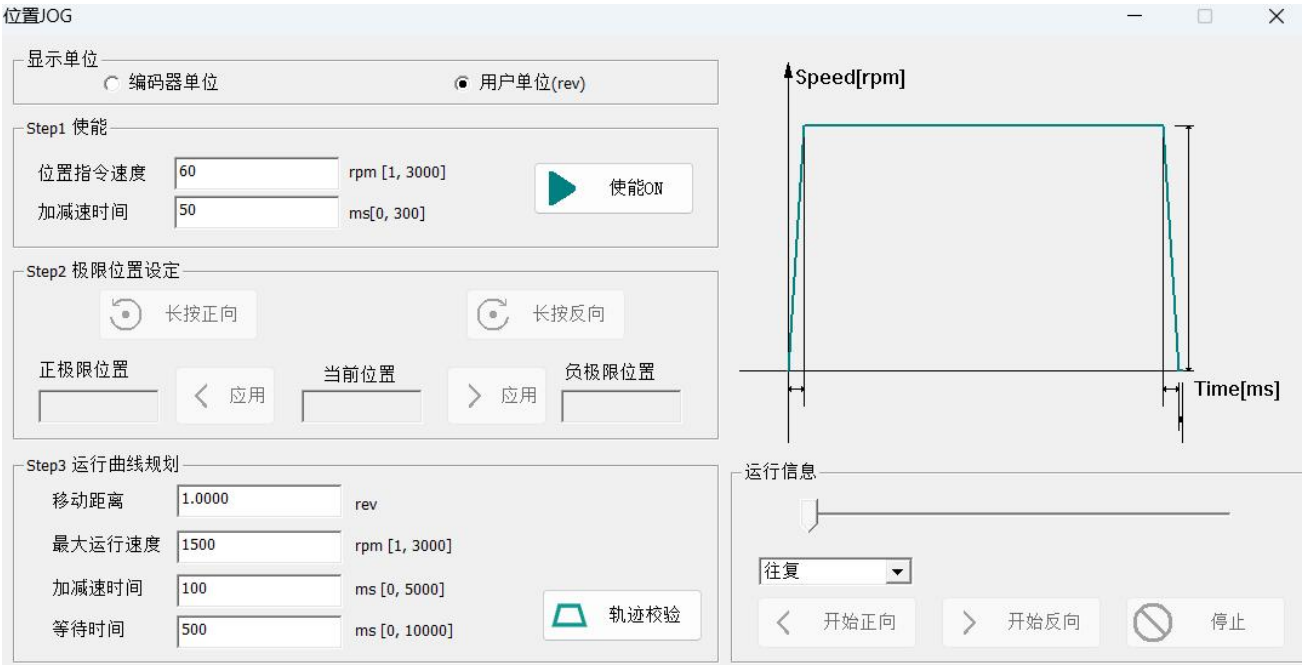

Figure 3-21 position JOG

The use steps are as follows:

1. Input motor running speed and deceleration time parameters, click the ON button;

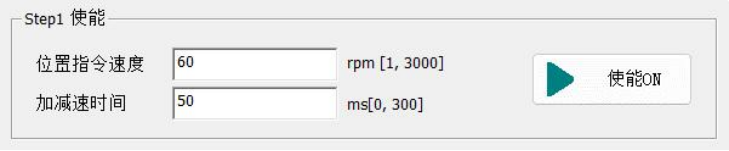

Figure 3-22 enable ON

2. Running limit position setting: long press the left mouse button and "long press forward" long press, "long press reverse" to set the positive and negative limit position:

Figure 3-23 Positive and negative limit position setting

3. Running curve planning: set the running curve trajectory parameters;

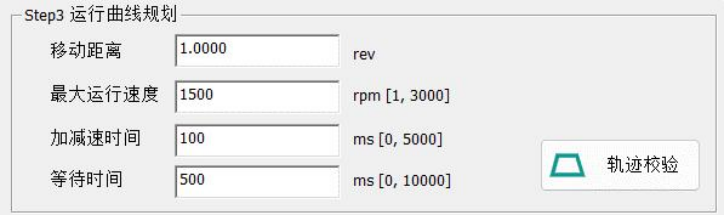

Figure 3-24 Run curve configuration

Figure 3-25 Click "Track Check" to generate the simulated running curve;

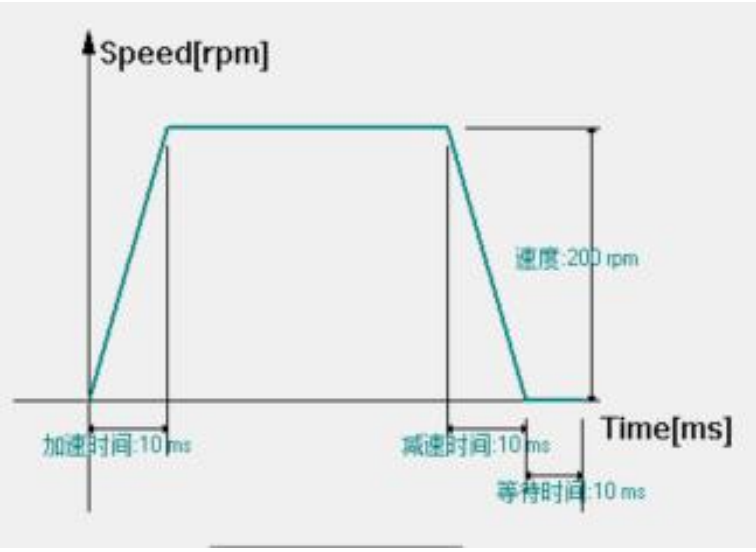

Figure 3-26 Run track generation

4. move

Single: the motor is within the operating limit and moves the specified distance.

Reciprocating: The motor will reciprocate at the specified limit position range.

Click the button "Start forward" "Start reverse" to start running, click the button "stop" the motor to stop running;

Figure 3-27 move

(3) Preset position task

This function supports users to preset multiple running tracks with a maximum of 16 segments.

Click the toolbar to enter the preset position task interface:

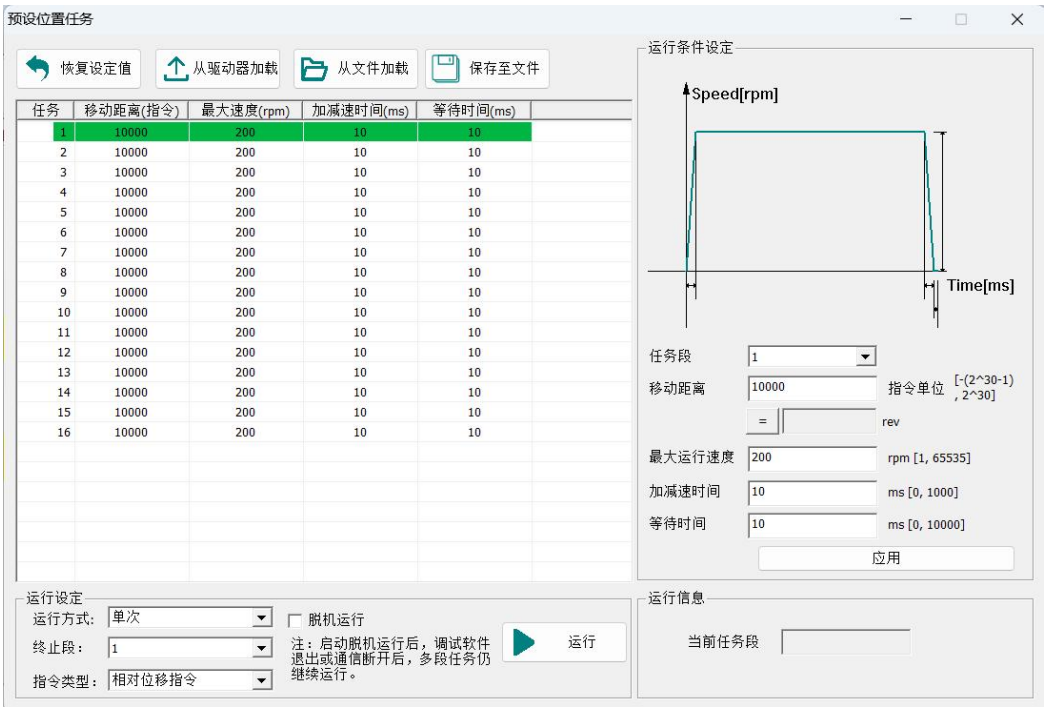

Figure 3-28 position JOG

The use steps are as follows:

1. Edit the track parameters of each segment: select the specified task segment in the list, edit the running parameters, and click "Apply" to update the parameters to the list;

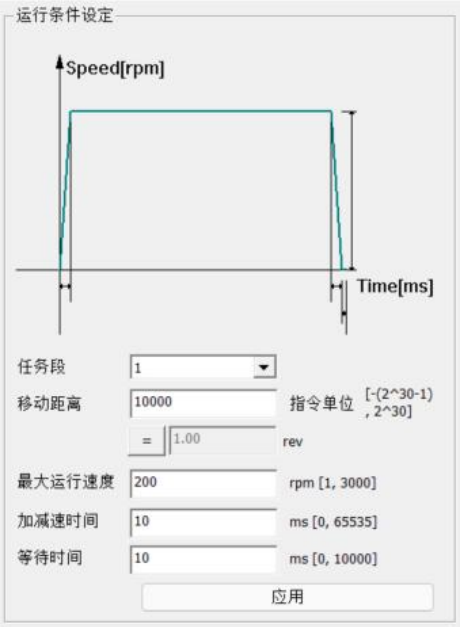

Figure 3-29 Location segment configuration

2. Run the setting

Operation mode: support single and cycle. Multiple position tasks run only once in single mode; multiple positions run in circular mode;

Terminated segment: the number of segments the user can choose to execute, the program will run the end only segment from the first segment;

Command type: support the relative displacement instruction and the absolute displacement instruction;

Click "Run" to start the multiple track task, and the motor runs according to the preset track;

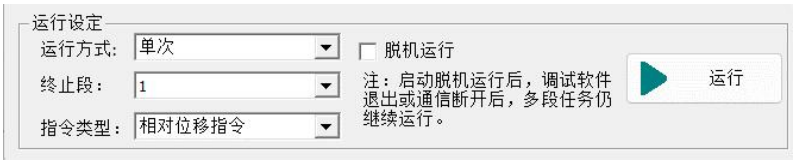

Figure 3-30 move

(4) Back to zero

This function supports 35 zero mode, users can directly select the mode, or generate the corresponding zero mode according to the origin regression mode, start direction, the limit trajectory, and the zero completion position, etc.

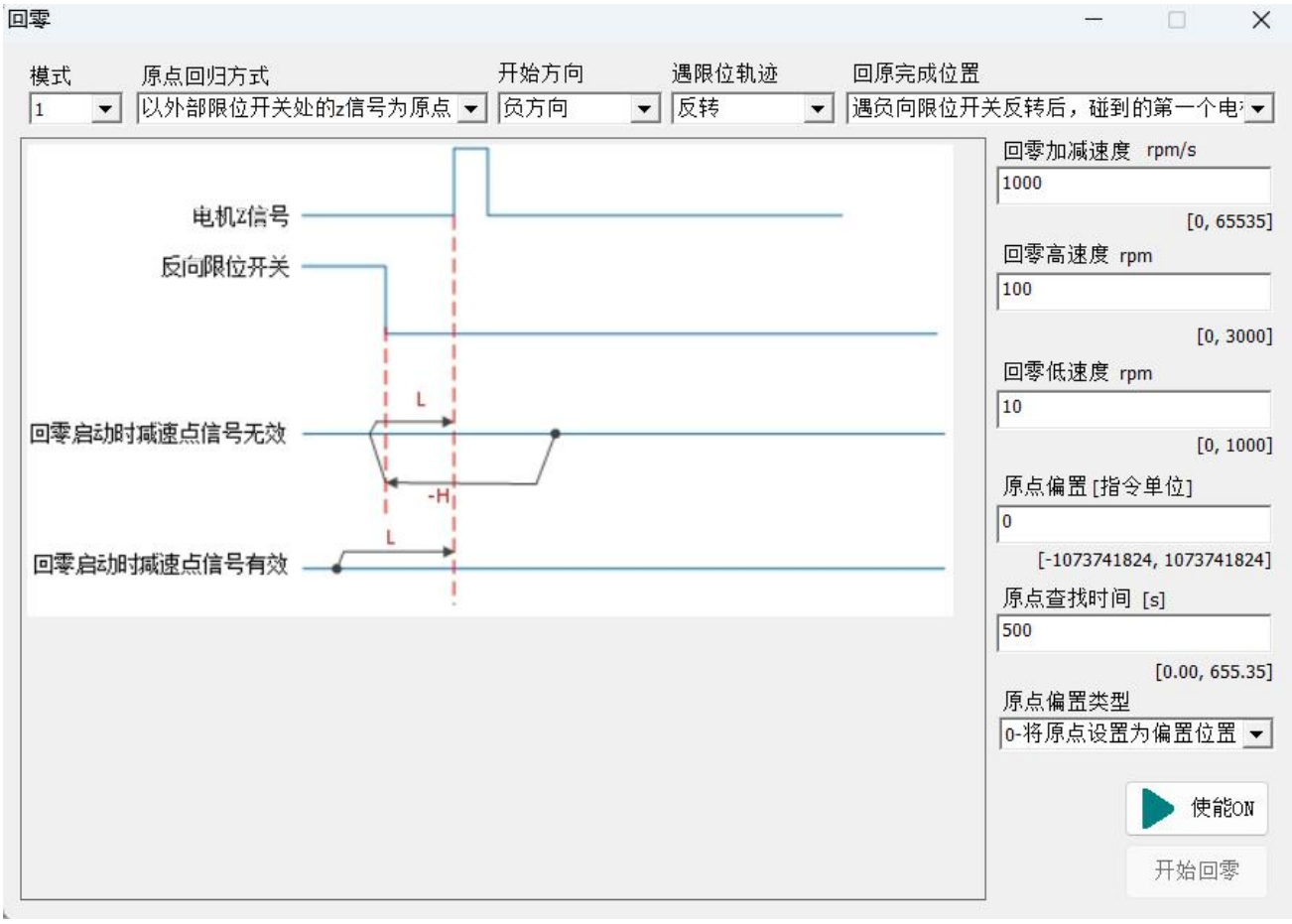

Figure 3-31 Back to zero

3.3.7 harmonious

(1) Offline inertia identification

This function is based on the offline mode for inertia identification.

Click on the toolbar to enter the offline inertia identification interface:

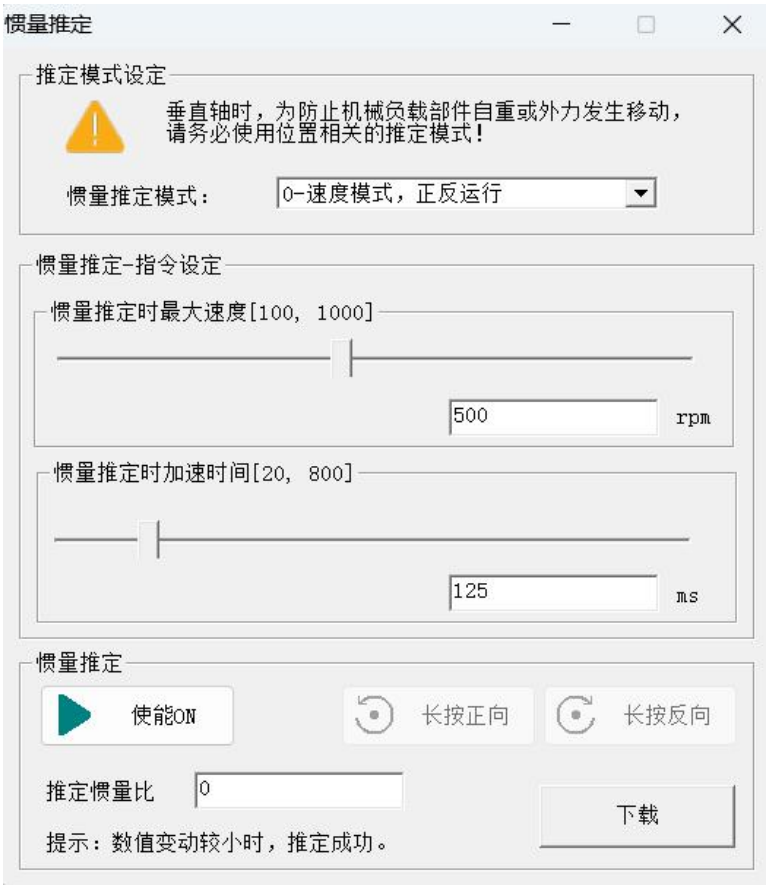

Figure 3-32 Habit identification

The use steps are as follows:

1. Parameter setting: set the identification mode, maximum speed and acceleration time, the software supports four modes: "0-speed mode, positive and reverse operation", "1-speed mode, electric operation", "2-position mode, positive and reverse operation", "3-position mode, one-way operation";
2. Click the enabling switch to enable the drive;
3. Left mouse button long press "long press forward" "long press reverse" button, inertia identification,
4.

The current identification results are displayed in real time. If the value of the identification results changes is very small, it can be judged as the end of the identification. Click the "Download" button to write the identification results into the drive.

(2) gain adjustment

The software supports two kinds of gain adjustment methods: automatic gain adjustment and manual gain adjustment.

- automatic gain control

Users can drag the slider or by clicking the "-" and "+" buttons to lower or increase the rigidity level.

Figure 3-33 Rigid table setting

- Manual gain adjustment

The instruction form supports the sine and step forms. Support the adjustment of the corresponding loop gain in the three control modes of position, speed and torque.

Figure 3-34 Speed-loop gain adjustment

(3) frequency-domain analysis-FRF

Frequency domain analysis supports three modes: speed closed loop, speed open loop, and mechanical characteristics.

- Speed closed loop: automatically calculate and annotate the amplitude bandwidth and phase bandwidth.

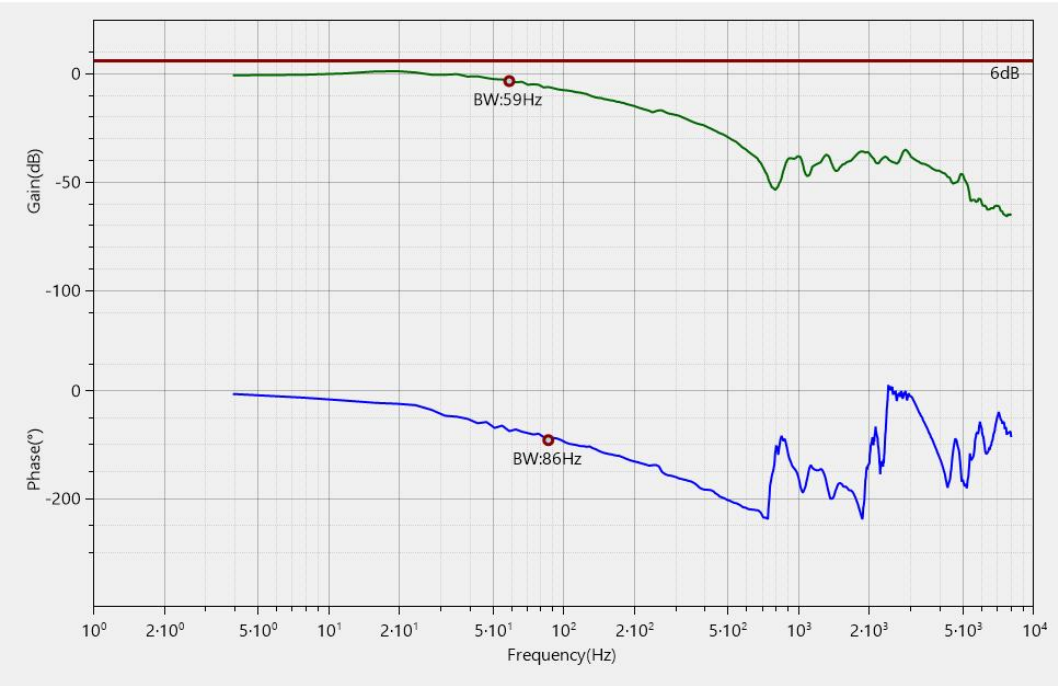

Figure 3-35 Speed closed loop

- Speed open loop: automatically calculate and mark the amplitude margin and phase margin.

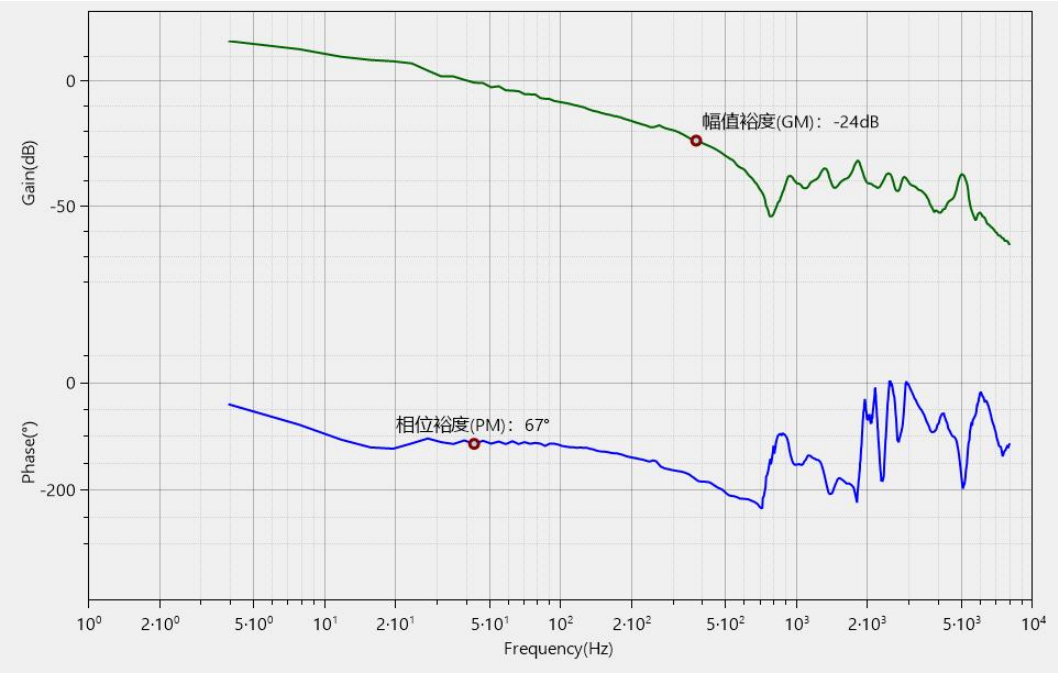

Figure 3-36 Speed open ring

- Mechanical characteristics: Automatic identification of resonance points and counterresonance points.

At present, the debugging software will automatically identify two resonance points, and automatically update the setting parameters of the trap. The user can directly click and download to write the identified resonance point frequency into the drive.

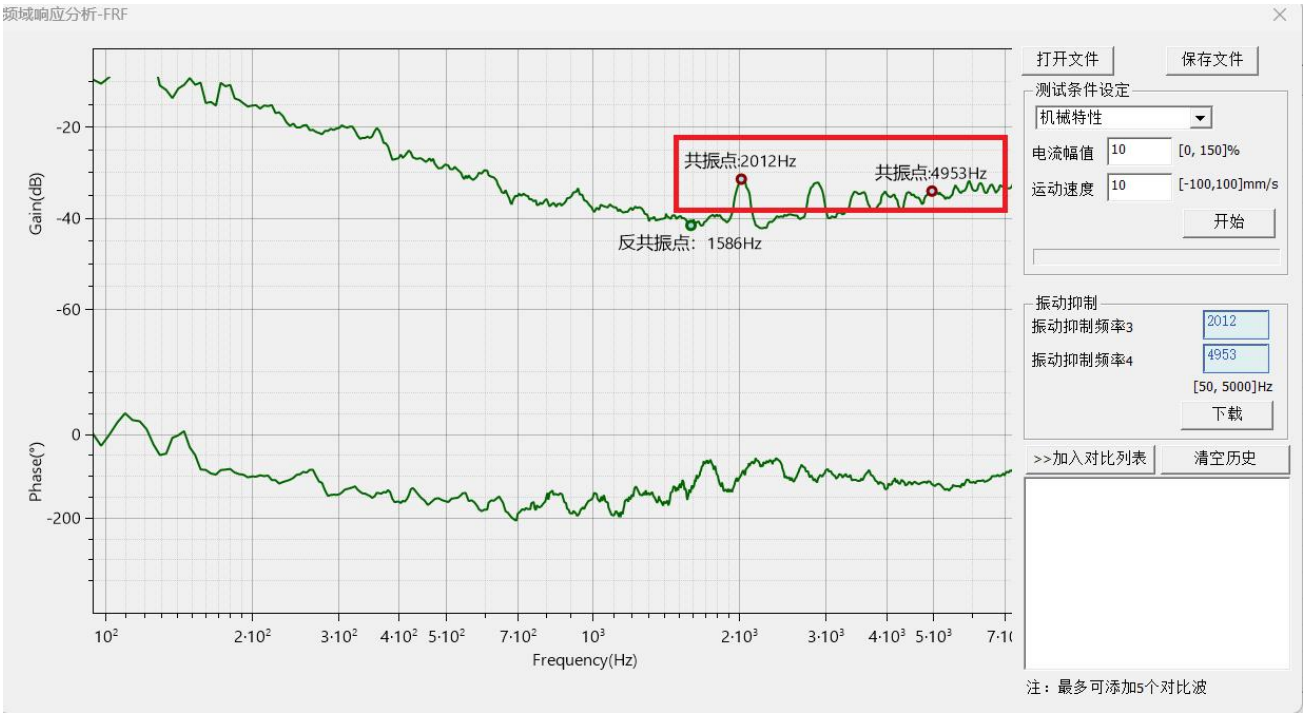

Figure 3-37 mechanical properties

3.3.8 troubleshooting

(1) real time fail

When the equipment fails, the debugging software status bar prompts the user in real time (as shown in the figure below). The user can double-click the fault area to view the fault details, with the fault identification in red and the yellow identification warning.

Figure 3-38 Fault prompt

Fault details include: fault name, level, whether it can be reset, fault cause, detection method and solution method, etc., to facilitate users to quickly troubleshoot faults.

Figure 3-39 fault diagnosis

(2) Trouble history

This feature supports query the last 10 historical fault information.

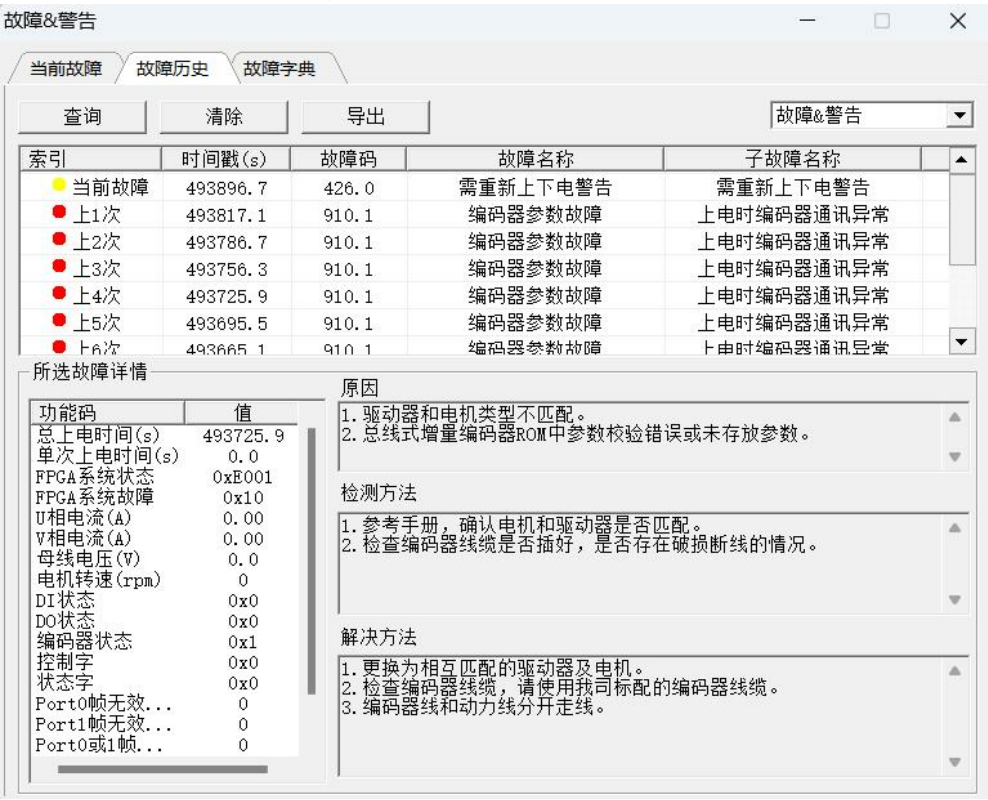

Figure 3-40 Trouble history

"Query" button: query the recent fault history of the device, as shown in the figure above;

Clear the push button: clear the historical fault record in the drive;

Select the historical list line under the mouse, display the selected fault related parameter information and troubleshooting information;

(3) fault dictionary

This function can query the fault information of all HR3 series servos;

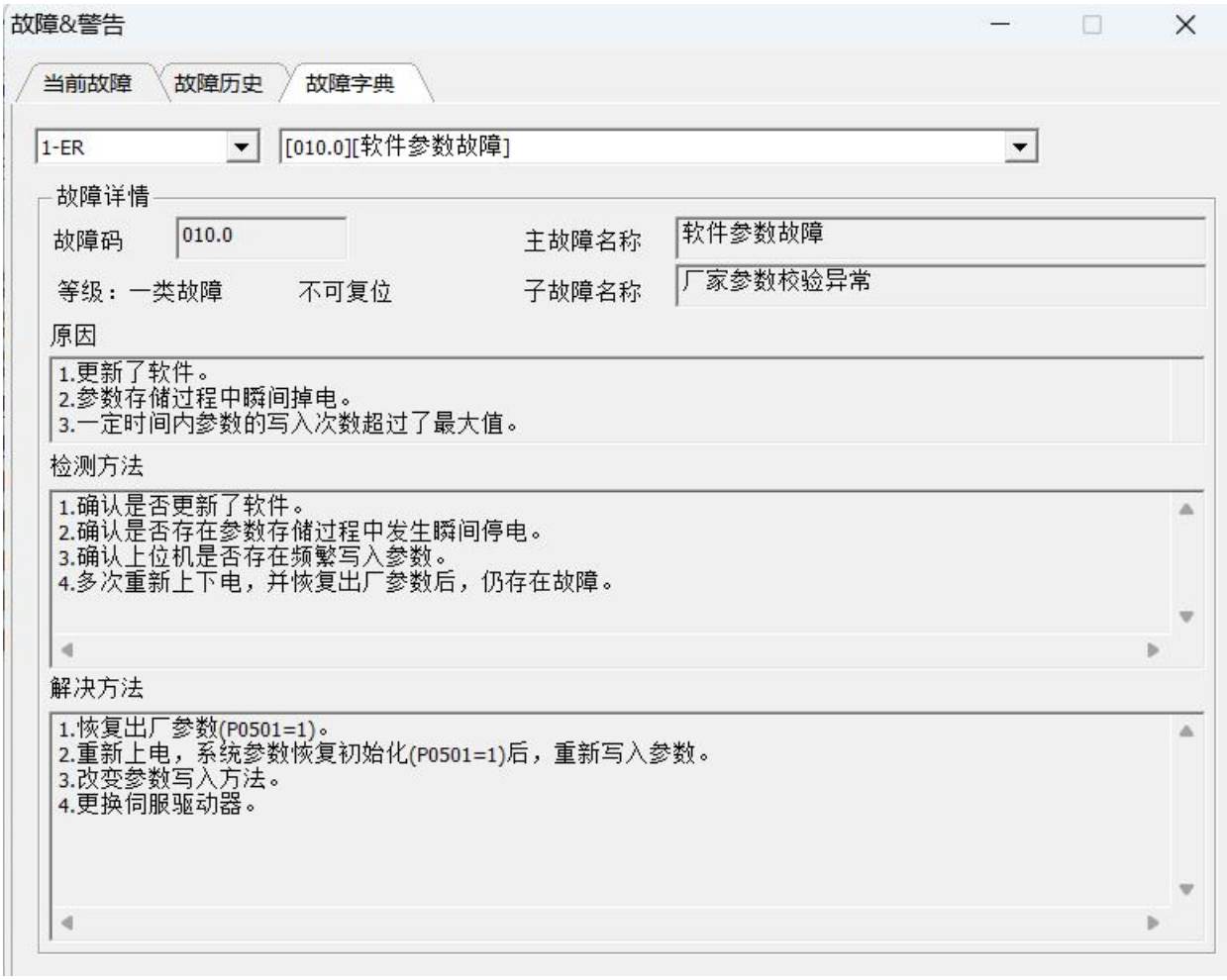

Figure 3-41 fault dictionary

3.4 EtherCAT Control of the operation

3.4.1 Running status control

(1) state machine

The control word 6040h, the state word 6041h, and the relationship between the internal event and the state machine are shown in the following figure: the state can be switched by the control word or the internal event, and the current state can be read out by the state word.

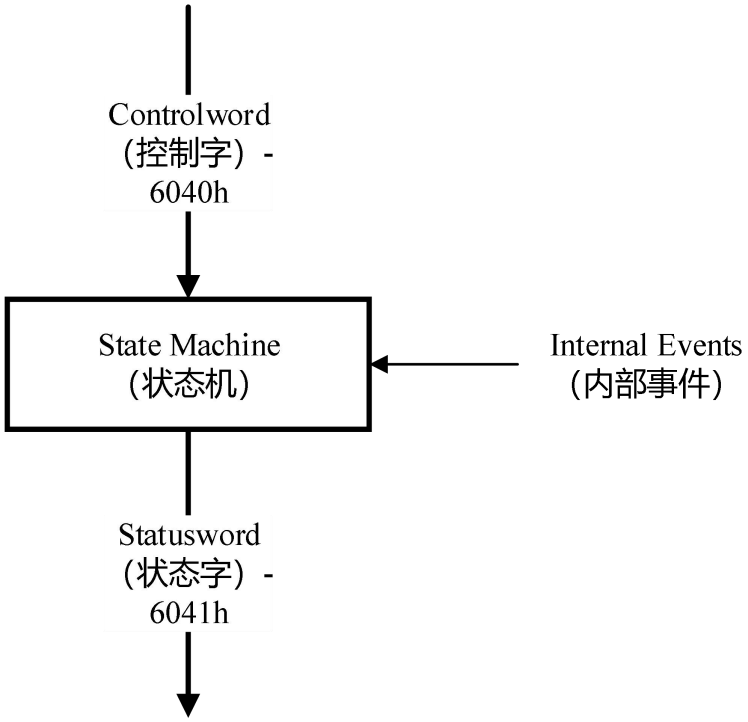

Figure 3-42 Cia402 Protocol overview diagram

The status machine describes the device status and the possible control order of the drives. A single state represents a special internal or external behavior. The state of the drive also determines which commands to accept. For example, the point-to-point movement starts only when the drive is in the Operation Enabled state.

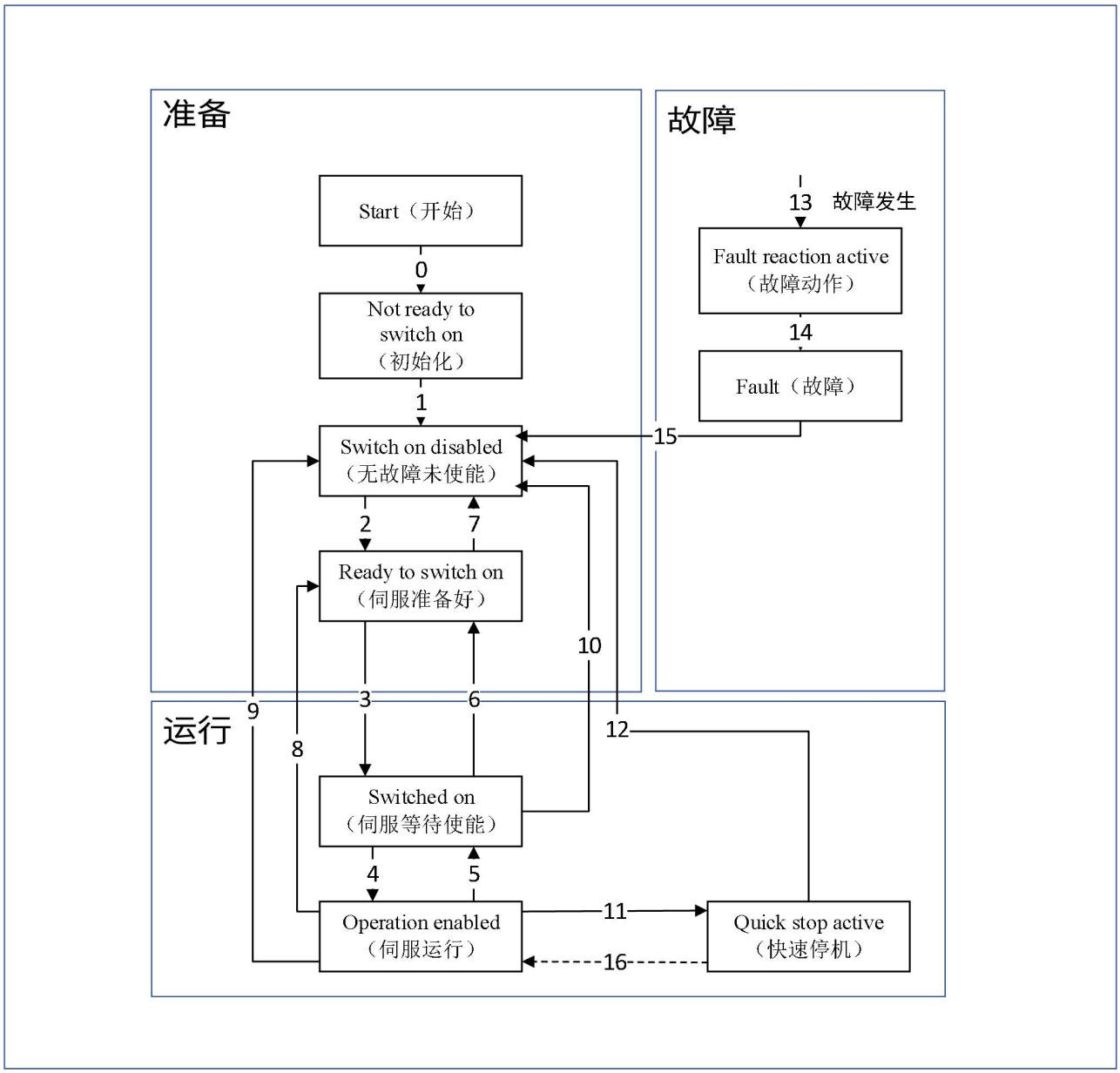

Figure 3-43 CiA402 State machine switching diagram

Table 3-21 state description

state	description
initialise	The servo driver controls the power input; The servo drive is initializing or self-checking; If there is a lock function, it is working at this time; The drive function is invalid;
No fault, no energy	Servo-drive initialization is complete; Servo-drive parameters can be modified; Servo drive power power is not input; The drive function is invalid;
Servo ready	Servo drive power power input; Servo-drive parameters can be modified; The drive function is invalid;
Servo waits for enabling	Servo drive is waiting for enable;
Servo operation	Servo drive has not detected a fault; Electric power; The servo-drive parameter part can be modified; Drive function is valid;
Quick shutdown	Perute quick shutdown action; Electric power; Drive function is valid;
Fault action	The servo driver detects a fault; Execute the fault shutdown action; Electric power; Drive function is valid;
hitch	Servo-drive alarm; The motor is not energized; The drive function is invalid;

Table 3-22

Table 3-23

Table 3-24 Controls the command and the state switching

CiA402 State switching			event	movement
order number	initial status	terminal state		
0	begin	initialise	reset	Servo self-test / initialization
1	initialise	No fault, no energy	Self-test / initialization was successful	Activate communication
2	No fault, no energy	Servo ready	Receiving the Shutdown command from the host (* 1)	not have
3	Servo ready	Servo waits for enabling	Receive the "SwitchOn" command from the host machine	If power is not connected, power is applied
4	Servo waits for enabling	Servo operation	Receive the "Enable Operation" command from the host machine	The driving function is effective
5	Servo operation	Servo waits for enabling	Receive the "Disable Operation" command from the host machine	Invalid drive function
6	Servo waits for enabling	Servo ready	Receive the "Shutdown" command from the host machine	Turn off power
7	Servo ready	No fault, no energy	Received the Quick Stop or Disable Voltage command from the host	not have
8	Servo operation	Servo ready	Receive the "Shutdown" command from the host machine	Turn off the power power immediately, if there is no lock, the motor will stop freely
9	Servo operation	No fault, no energy	Received the Disable Voltage command from the host	Turn off the power power immediately, if there is no lock, the motor will stop freely
10	Servo waits for enabling	No fault, no energy	Received the Quick Stop or Disable Voltage command from the host	Turn off the power power immediately, if there is no lock, the motor will stop freely
11	Servo operation	Quick shutdown	Receive the "Quick Stop" command from the host machine	Perform a quick shutdown action
12	Quick shutdown	No fault, no energy	The Quick Stop execution completes or receives the Disable Voltage command from the host	Turn off power
13	free position	Fault action	The mistake happened	Perform fault shutdown
14	Fault action	hitch	The wrong action is completed	Turn off power
15	hitch	No fault, no energy	Receive the "Fault Reset" command from the host machine	Clear the fault, the control word Fault Reset bit must be set 0 after clearing the fault
16	Quick shutdown	Operation enabled	Receive the "Enable Operation" command from the host machine	Servo enable (require quick stop mode 5,6,7 or 8, see the Quick Stop section)

* 1. The host sends the "Shutdown" command through the control word, and multiple logical combinations of different bit positions 1 set 0 constitute different commands. For details, please see the control command chapter.

(2) Control word for 6040h

Table 3-25 Control word for 6040h

0x6040-Control Word	
Index-sub-index	0x6040-00
data type	UINT16
accessibility	Readable / scripted
unit	-
Windows default	0
least value	0
crest value	65535
Set and effective mode	Operation setting / shutdown takes effect
Related mode	ALL
explanatory note	

Bit	name	description
0	Servo operation can be enabled	Setting method: 1-valid, 0-invalid
1	Connect the main circuit power	Setting method: 1-valid, 0-invalid
2	Quick shutdown	Setting method: 0-valid, 1-invalid
3	Servo operation	Setting method: 1-valid, 0-invalid
4-6	Running mode related	Different operation modes have different meanings
7	Fault reset	Reset the recoverable fault and warning, setting mode: rise edge, keep to 1, all other control instructions are invalid
8	suspend	Each movement mode has different shutdown modes. For details, please see the object dictionary 605A
9	Running mode related	Different operation modes have different meanings
10	continue to have	Retain the parameters for no significance
11-15	Manufacturer custom	Manufacturer custom parameters

control command

order	control word				
	bit7	bit3	bit 2	bit 1	bit.0
Shutdown	0	X	1	1	0
Switch on	0	0	1	1	1
Enable operation	0	1	1	1	1
Disable voltage	0	X	X	0	X
Quick Sstop	0	X	0	1	X
Disable operation	0	0	1	1	1
Fault reset	rising edge	X	X	X	X

Table 3-26 Status word 6041h

0x6041-Status word	
Index-sub-index	0x6041-00
data type	UINT16
accessibility	readable
unit	-
Windows default	0
least value	0
crest value	0-65535
Set and effective mode	-
Related mode	ALL
explanatory note	Reaction servo state

Bit	name	description
0	Servo ready	Status display: 1-valid, 0-invalid
1	Servo operation can be enabled	Status display: 1-valid, 0-invalid
2	Servo operation	Status display: 1-valid, 0-invalid
3	hitch	Status display: 1-valid, 0-invalid
4	The main loop is connected	Status display: 1-valid, 0-invalid
5	Quick shutdown	Status display: 0-valid, 1-invalid
6	Servo is not operational	Status display: 1-valid, 0-invalid
7	warn	Status display: 1-valid, 0-invalid
8	Manufacturer custom	Manufacturer custom parameters
9	telecontrol	Status display: 1-valid, 0-invalid
10	Target to arrive	Status display: 1-valid, 0-invalid
11	Internal restrictions are valid	Status display: 1-valid, 0-invalid
12-13	Running mode related	Different operation modes have different meanings
14	Manufacturer custom	Manufacturer custom parameters
15	The origin has been found	Status display: 1-valid, 0-invalid

state feedback

state	status word						
	B it6	B it5	B it4	B it3	B iS2	B it1	B it0
initialise	0	X	X	0	0	0	0
No fault, no energy	1	X	X	0	0	0	0
Servo ready	0	1	X	0	0	0	1
Servo waits for enabling	0	1	X	0	0	1	1

	Servo operation	0	1	X	0	1	1	1
	Quick shutdown	0	0	X	0	1	1	1
	Fault action	0	X	X	1	1	1	1
	hitch	0	X	X	1	0	0	0

3.4.2 PDO configure

PDO is divided into RPDO and TPDO, in which the main station gives instructions to the slave station through RPDO, and the slave station feeds its own status to the main station through TPDO, as shown in the figure below.

Table 3-27 PDO communication

	Send letter side	Receive letter side
RxPDO	main station	slave station
TxPDO	slave station	main station

In practical application, HR3 series servo drive can only do slave station, the main station is generally PC or PLC, RxPDO sends control word, operation mode, speed instruction and other commands, the servo drive through TxPDO feedback state word, actual operation mode, speed actual value and other state variables.

(1) PDO shine upon

The mapping from the object dictionary to the application object of the PDO is called the PDO mapping.(PDO and SDO)

HR3 series servo provides 5 sets of fixed RPDO and 4 sets of fixed TPDO and a set of variable RPDO and a set of variable TPDO, and the maximum application object data length per set of PDO is 32 Byte.

The Fixed PDO is shown in the table below:

Table 3-28 Fixed PDO Map List (RPDO)

RPDO	Total number of bytes	Mapping object
1701h	12	6,040 h-for the control word 607Ah-target location 60B8h-probe function 60 FEh-Digital output
1702h	19	6,040 h-for the control word 607Ah-target location 60 F Fh-target speed 6071h-target torque 6060h-Mode selection 60B8h-probe function 607 Fh-Max. Speed Speed
1703h	17	6,040 h-for the control word 607Ah-target location 60 F Fh-target speed 6060h-Mode selection 60B8h-probe function 60E0h-forward torque limit 60E1h-reverse torque limit
1704h	23	6,040 h-for the control word 607Ah-target location 60 F Fh-target speed 6071h-target torque 6060h-Mode selection 60B8h-probe function 607 Fh-Max. Speed Speed 60E0h-forward torque limit 60E1h-reverse torque limit
1705h	19	6,040 h-for the control word 607Ah-target location

RPDO	Total number of bytes	Mapping object
		60 F Fh-target speed 6060h-Mode selection 60B8h-probe function 60E0h-forward torque limit 60E1h-reverse torque limit 60B2h-Torent offset

Table 3-29 Fixed PDO Map List (TPDO)

TPDO	Total number of bytes	Mapping object
1B01h	28	603 Fh-error code 6041h-State word 6064h-position feedback 6077h- -torque feedback 60F4h-positional deviation 60B9h-probe state 60 BAh-probe 1 rises along the position 60FDh-DI state
1B02h	25	603 Fh-error code 6041h-State word 6064h-position feedback 6077h- -torque feedback 6061h-mode is shown 60B9h-probe state 60 BAh-probe 1 rises along the position 60 BCh-probe 2 rises along the position 60FDh-DI state
1B03h	29	603 Fh-error code 6041h-State word 6064h-position feedback 6077h- -torque feedback 60F4h-positional deviation 6061h-Mode selection 60B9h-probe state 60 BAh-probe 1 rises along the position 60 BCh-probe 2 rises along the position 60FDh-DI state
1B04h	29	603 Fh-error code 6041h-State word 6064h-position feedback 6077h- -torque feedback 60F4h-positional deviation 6061h-Mode selection 60B9h-probe state 60 BAh-probe 1 rises along the position 60 BCh-probe 2 rises along the position The 606 Ch-speed feedback

The variable PDO is shown below:

Table 3-30 List of variable PDO maps

PDO	index of matrix	Default mapping object	remarks
RPDO	1600h	6,040 h-for the control word 607Ah-target location 60B8h-probe function 6060h-Run mode	10 mapped objects The longest number of bytes is 40
TPDO	1A00h	603 Fh-error code 6041h-State word 6061h-Current operating mode 6064h-position feedback 60 BCh-probe 2 rises along the position 60B9h-probe state 60 BAh-probe 1 rises along the position 60FDh-DI state	

(2) PDO to assign objects

SM channel (SyncManager) is a memory area on the station control chip. In order to use PDO for data exchange, you must switch the PDO mapping object list to the SM channel. As mentioned above, there are multiple groups of PDO mapping lists in HR3, but in practice, select an RPDO and a TPDO for data exchange, as shown in the following table:

Table 3-31 SM channel configuration

index of matrix	subindex	description
0x1C12h	01h	Select an RPDO as the actual RPDO
0x1C13h	01h	Select a TPDO as the actual TPDO

Note: RPDO: 0x1600h, 0x1701h-0x1705h are the mapping list, which can be understood as a set of some data objects, 0x1C12h

It selects a collection of data objects for the actual master-slave communication. The same goes for TPDO.

3.4.3 Run mode settings

(1) Servo mode introduction

HR3 series servo drive supports 7 operating modes, mode control 6060h is used to control servo operation in different control mode, mode display 6061 is used to display the current control mode.

Table 3-32 The HR3 series servo drives support the operating mode

control model	Control mode 6060h set value	Minimum communication period
Outline position mode	1	1ms
Outline speed mode	3	500μs
Outline torque mode	4	125μs
Periodic synchronous position mode	8	1ms
Periodic synchronization speed mode	9	500μs
Periodic synchronous torque mode	10	125μs
Origin regression mode	6	1ms

Note: A synchronous cycle with integer times of the position loop control cycle (250 μ s) can also be supported.

(2) Periodic Synchronous Position Mode (CSP)

In the periodic synchronous position mode, the motion planning of the servo motor is completed by the upper computer, and then periodically gives the position instructions to the servo driver, and the communication cycle and synchronization mode are set by the main station.

pay attention to:

- The minimum communication cycle of CSP is 1ms, and when it is set to more than 1ms, the communication cycle shall be an integer multiple of the position loop control cycle (the position loop control cycle is 250 μ s);
- For CSP mode, please use DC synchronization;
- When the CSP mode switches to another mode, the unexecuted position instruction will be discarded in any state;
- In servo running state, when switching from other mode to periodic synchronization mode, please send instruction at at least 1ms interval, otherwise instruction loss or error will occur.

① Control block diagram

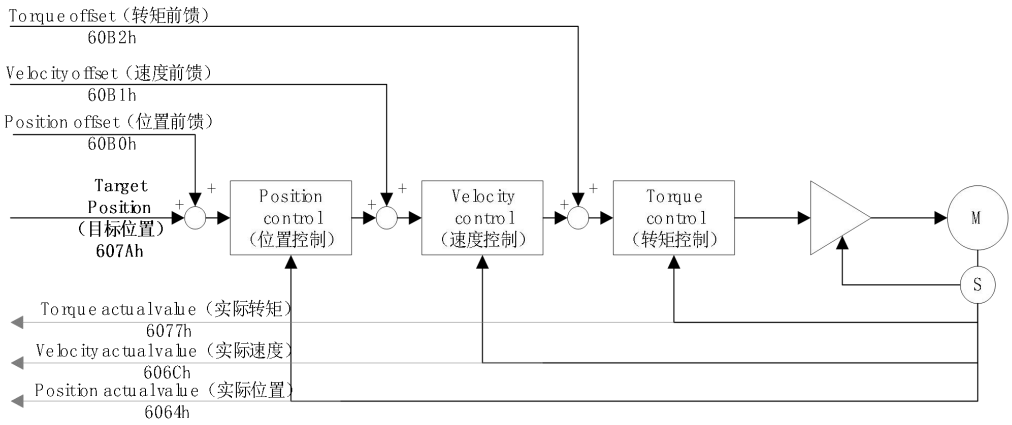

Figure 3-44 Overview diagram of the synchronous periodic position pattern

② Related object (Instruction * setting class)

Note: For detailed instructions for related objects, see"Chapter 6: The Object Dictionary"。
General object:

Table 3-33 0x6040 control word

<table>
<tr><th colspan="2">0x6040-Control Word</th></tr>
<tr><td>Index-sub-index</td><td>0x6040-00</td></tr>
<tr><td>data type</td><td>UINT16</td></tr>
<tr><td>accessibility</td><td>Readable / scripted</td></tr>
<tr><td>unit</td><td>-</td></tr>
<tr><td>Windows default</td><td>0</td></tr>
<tr><td>least value</td><td>0</td></tr>
<tr><td>crest value</td><td>65535</td></tr>
<tr><td>Set and effective mode</td><td>Operation setting / shutdown takes effect</td></tr>
<tr><td>Related mode</td><td>ALL</td></tr>
<tr><td>explanatory note</td><td>In the CSP mode, only the absolute position instruction is supported
Mode correlation: Both Bit 0 to bit 3 are both 1, indicating the start of operation
<table>
<tr><th>Bit</th><th>name</th><th>description</th></tr>
<tr><td>0</td><td>Servo ready</td><td>Setting method: 1-valid, 0-invalid</td></tr>
<tr><td>1</td><td>Connect the main circuit power</td><td>Setting method: 1-valid, 0-invalid</td></tr>
<tr><td>2</td><td>Quick shutdown</td><td>Setting method: 0-valid, 1-invalid</td></tr>
<tr><td>3</td><td>Servo operation</td><td>Setting method: 1-valid, 0-invalid</td></tr>
<tr><td>8</td><td>suspend</td><td>0: invalid.
1: Hold the servo at 605 Dh setting.</td></tr>
</table></td></tr>
</table>

Table 3-34 Instructions set related objects in CSP mode

index of matrix	subindex	name	unit	scope	data type	accessibility	PDO
6040	00	control word	-	0~65535	UINT16	RW	RPDO
6060	00	Servo mode selection	-	0~10	INT8	RW	RPDO
6065	00	Position deviation with excessive threshold	Directive unit	$0\sim(2^{32-1})$	UINT32	RW	RPDO
6067	00	The position reaches the threshold	Encoder unit	0~65535	UINT32	RW	RPDO
6068	00	Location arrives at the window time	ms	0~65535	UINT16	RW	RPDO
6072	00	Maximum torque instruction	0.1%	0~5000	UINT16	RW	RPDO
607A	00	target location	Directive unit	$-2^{31\sim(231-1)}$	INT32	RW	RPDO
6091	01	Electrical resolution	-	$0\sim(2^{32-1})$	UINT32	RW	RPDO
	02	Load axis resolution	-	$1\sim(2^{32-1})$	UINT32	RW	RPDO
60B0	00	Location bias	Directive unit	$-2^{31\sim(231-1)}$	INT32	RW	RPDO
60B1	00	Speed bias	Directive unit / s	$-2^{31\sim(231-1)}$	INT32	RW	RPDO
60B2	00	Recurrent bias	0.1%	-5000~5000	INT32	RW	RPDO
2006	01	The velocity proportional gain of 1	0.1Hz	1~20000	UINT16	RW	-
	02	The velocity-integral gain of 1	0.01ms	15~51200	UINT16	RW	-
	03	Position-scale gain of 1	0.1Hz	0~20000	UINT16	RW	-
	09	Speed-feedforward proportional gain	0.1%	0~1000	UINT16	RW	-
	0A	Torque-forward feed-forward proportional gain	0.1%	0~2000	UINT16	RW	-
2007	03	Recurrent filter 1	0.01ms	0~3000	UINT16	RW	-
	0 7	Speed-feedforward filtering time	0.01ms	0~6400	UINT16	RW	-
	0 8	Torque feed-	0.01ms	0~6400	UINT16	RW	-

		forward filtering time					

③ Related Objects (Status * Monitoring Class)

Table 3-35 The 0x6041 status word

0x6041-Status Word	
Index-sub-index	0x6041-00
data type	UINT16
accessibility	readable
unit	-
Windows default	0
least value	0
crest value	65535
Set and effective mode	-
Related mode	ALL
explanatory note	Reaction servo state Pattern related:

Bit	name	description
10	Target location arrived	Status display: 1-arrived, 0-not arrived
11	The internal position of the software is overrun	Status display: 1-no limit, 0-no limit
12	Follow the instructions from the station	Status display: 1-follow, 0-did not follow
13	Follow the error	Status display: 1-limit, 0-no limit
15	Complete back to zero	Status display: 1-Completed, 0-incomplete

Table 3-36 State monitors related objects in CSP mode

index of matrix	subindex	name	unit	scope	data type	accessibility	PDO
603F	00	Error code	-	0~65535	UINT16	RO	TPDO
6041	00	status word	-	0~65535	UINT16	RO	TPDO
6061	00	Running mode is shown	-	0~10	INT8	RO	TPDO
6062	00	Location instruction	Directive unit	-	DINT32	RO	TPDO
6063	00	position feedback	Encoder unit	-	INT32	RO	TPDO
6064	00	position feedback	Directive unit	-	INT32	RO	TPDO
606C	00	actual velocity	Directive unit / s	-	INT32	RO	TPDO
6077	00	The actual torque	0.1%	-5000~5000	INT16	RO	TPDO
60F4	00	position deviation	Directive unit	-	DINT32	RO	TPDO
60FC	00	Location instruction	Encoder unit	-	DINT32	RO	TPDO

④ Related functionality settings

A） Positioning completed

If the difference between the actual position and the target position is within a certain threshold range and maintained for a certain period of time, the DO is valid, and bit10=1 for 6041.

⚠ pay attention to:

Positioning the completion threshold and the completion window time must be met simultaneously. The control block diagram is as follows:

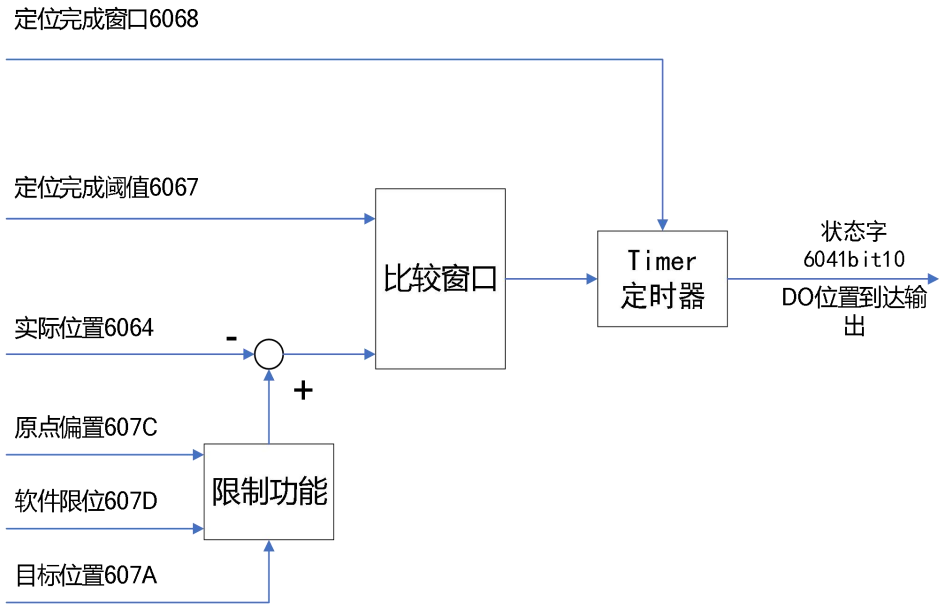

Figure 3-45 Complete map of CSP positioning

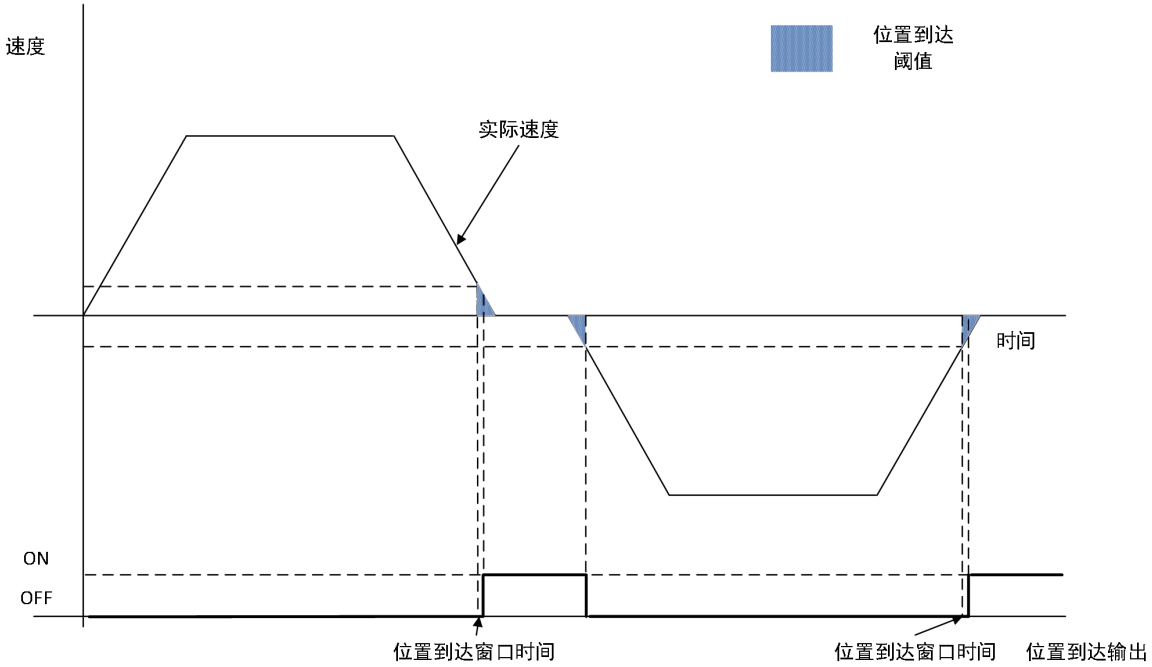

Figure 3-46 Schematic diagram of CSP mode positioning

Related object parameters are shown in the following table:

Table 3-37 The CSP location completes the relevant object

index of matrix	subindex	name	Set the range
2013	0C	Position to reach the threshold unit selection	0-Encoder unit 1-Command to the unit
6067	00	Locations complete the threshold	0~65535
6068	00	Position the completion window time	0~65535

B）Position deviation with excessive threshold

When the difference between the target position and the actual position exceeds a certain threshold, the servo drive alarms.

Table 3-38 CSP positional deviation

index of matrix	subindex	name	Set the range
6065	00	Position deviation with excessive threshold	0~(2^{32-1})

C）

C）Position alignment

Before servo operation, please keep 607A (target position) + 60B0 (position bias) consistent with 6064 (actual position value), to avoid high speed movement of servo motor due to position misalignment, as shown in the figure below.

(3) Periodic synchronous speed mode (CSV)

In the periodic synchronization speed mode, the speed planning of the servo motor is completed by the upper computer, and then the periodic speed instruction is given to the servo driver, and the communication cycle and synchronization mode are set by the main station.

pay attention to:

- The minimum communication period of CSV mode is 500 μ s;
- For CSV mode, please use DC synchronization;
- When CSV mode switches to another mode, the ramp shutdown is performed in any state. After the shutdown is completed, you can cut to another mode.

① Control block diagram

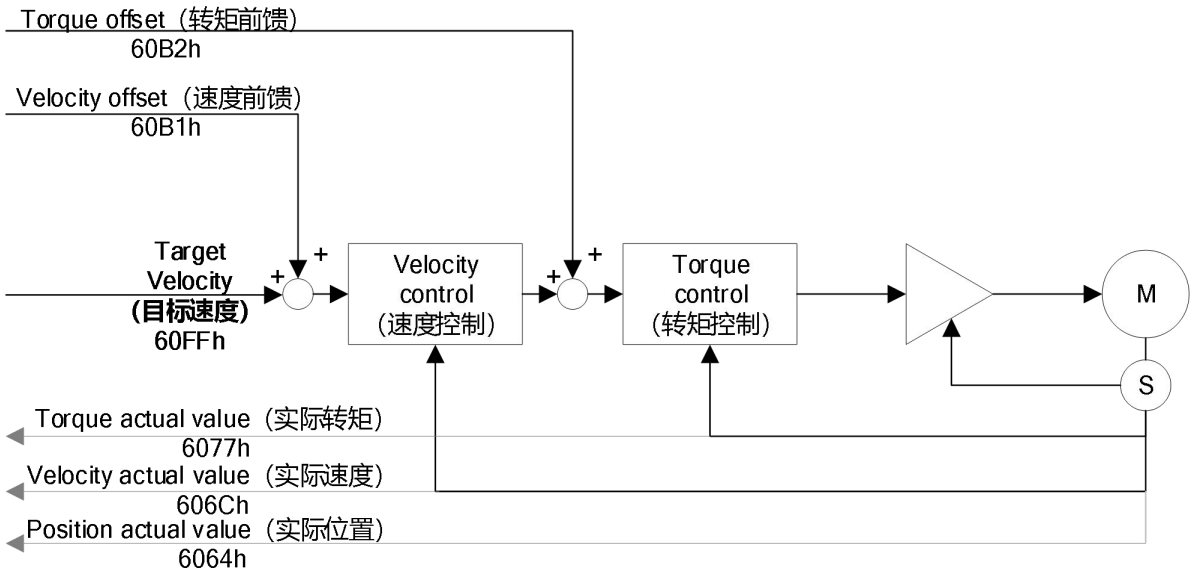

Figure 3-47 Overview view of synchronous cycle speed mode (CSV)

② Related object (instruction * setting class)

Note: For detailed instructions of related objects, see"Chapter 6: The Object Dictionary"。
General object:

Table 3-39 0x6040 control word

0x6040-Control Word	
Index-sub-index	0x6040-00
data type	UINT16
accessibility	Readable / scripted
unit	-
Windows default	0
least value	0
crest value	65535
Set and effective mode	Operation setting / shutdown takes effect
Related mode	ALL
explanatory note	In the CSP mode, only the absolute position instruction is supported Mode correlation: Both Bit 0 to bit 3 are both 1, indicating the start of operation

Bit	name	description
0	Servo ready	Setting method: 1-valid, 0-invalid
1	Connect the main circuit power	Setting method: 1-valid, 0-invalid
2	Quick shutdown	Setting method: 0-valid, 1-invalid
3	Servo operation	Setting method: 1-valid, 0-invalid
8	suspend	0: invalid. 1: Hold the servo at 605 Dh setting.

Table 3-40 Instructions to set related objects in CSV mode

index of matrix	subindex	name	unit	scope	data type	accessibility	PDO
6040	00	control word	-	0~65535	UINT16	RW	RPDO
6060	00	Servo mode selection	-	0~10	INT8	RW	RPDO
607F	00	maximum speed	Directive unit / s	$0\sim(2^{32-1})$	UDINT32	RW	RPDO
6083	00	Outline acceleration	Directive unit / s^2	$0\sim(2^{32-1})$	UDINT32	RW	RPDO
6084	00	The outline of the deceleration	Directive unit / s^2	$0\sim(2^{32-1})$	UDINT32	RW	RPDO
60B1	00	Speed bias	Directive unit / s	$-2^{31\sim(231-1)}$	INT32	RW	RPDO
60B2	00	Recurrent bias	0.1%	-5000~5000	INT32	RW	RPDO
60E0	00	Forward torque restriction	0.1%	0~5000	UINT16	RW	RPDO
60E1	00	Reverse torque restriction	0.1%	0~5000	UINT16	RW	RPDO
60FF	00	Target speed	Directive unit / s	$-2^{31\sim(231-1)}$	INT32	RW	RPDO
2006	01	The velocity	0.1Hz	1~20000	UINT16	RW	-

		proportional gain of 1					
	02	The velocity-integral gain of 1	0.01ms	15~5120 0	UINT16	RW	-
	0A	Torque-forward feed-forward proportional gain	0.1%	0~2000	UINT16	RW	-
2007	03	Recurrent filter 1	0.01ms	0~3000	UINT16	RW	-
	0 8	Torque feed-forward filtering time	0.01ms	0~6400	UINT16	RW	-

③ **Related Objects (Status * Monitoring Class)**

Table 3-41 The 0x6041 status word

0x6041-The Status Word	
Index-sub-index	0x6041-00
data type	UINT16
accessibility	readable
unit	-
Windows default	0
least value	0
crest value	65535
Set and effective mode	-
Related mode	ALL
explanatory note	Reaction servo state Pattern related:

Bit	name	description
10	Target speed reaches	Status display: 1-arrived, 0-not arrived
12	Follow the instructions from the station	Status display: 1-follow, 0-did not follow
15	The origin is done back to zero	Status display: 1-completed, 0-incomplete

Table 3-42 State monitors related objects in CSV mode

index of matrix	subindex	name	unit	scope	data type	accessibility	PDO
603F	00	Error code	-	0~65535	UINT16	RO	TPDO
6041	00	status word	-	0~65535	UINT16	RO	TPDO
6061	00	Running mode is shown	-	0~10	INT8	RO	TPDO
6063	00	position feedback	Encoder unit	-	INT32	RO	TPDO
6064	00	position feedback	Directive unit	-	INT32	RO	TPDO
606C	00	actual velocity	Directive unit / s	-	INT32	RO	TPDO
6077	00	The actual torque	0.1%	-5000~500 0	INT16	RO	TPDO

④ Related function settings

A） rate limitation

The speed limit motor is determined by the maximum rotation speed;

B） Speed reaches function

If the actual speed exceeds the speed reaching the signal threshold and remains for some time, the speed reaches the DO effective, and the bit 10 of the state word 6041 = 1.

Related object parameters are shown in the following table:

Table 3-43 The CSV mode speed reaches the function-related objects

index of matrix	subindex	name	Set the range
606Dh	00	The speed reaches the threshold	0~65535
606Eh	00	Speed reaches the window time	0~65535

(4) Periodic Sync Torque Mode (CST)

In the periodic synchronous torque mode, the motion planning of the servo motor is completed by the upper computer, and then the torque instruction is issued periodically out to the servo driver, and the communication cycle and synchronization mode are set by the main station.

⚠ pay attention to:

- The minimum communication period of the CST mode is 125 μ s;
- For the CST mode, please use the DC synchronization;
- When CST mode switches to other mode, perform ramp shutdown under any state. After the shutdown is completed, it can cut into other modes;
- In CST mode, speed control occurs when the speed reaches the limit value.

① Control block diagram

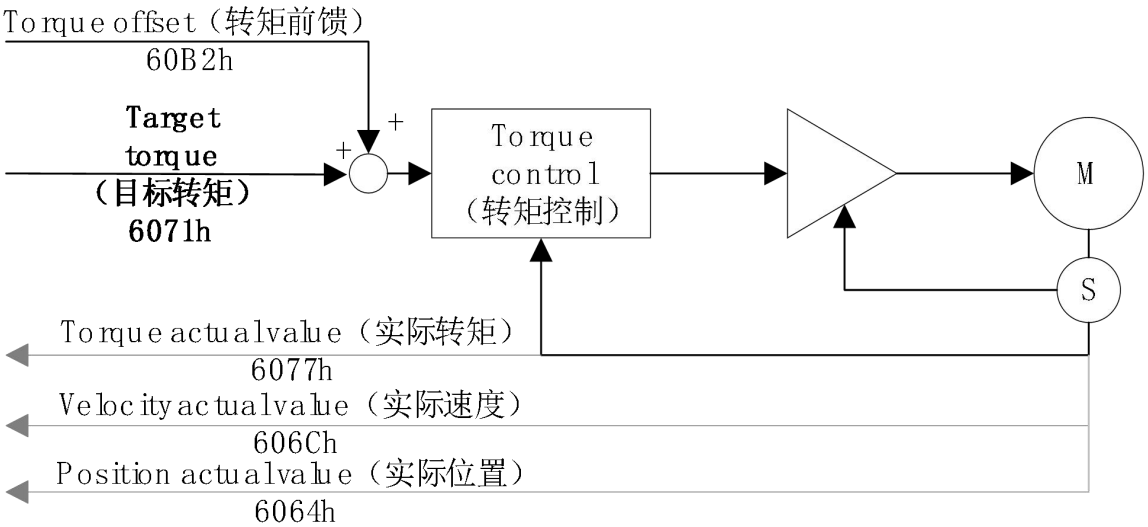

Figure 3-48 Overview view of the Synchronous Period Torque Mode (CST)

② Related object (instruction * setting class)

Note: For detailed instructions for related objects, see"Chapter 6: The Object Dictionary"。
General object:

Table 3-44 0x6040 control word

0x6040-Control Word	
Index-sub-index	0x6040-00
data type	UINT16
accessibility	Readable / scripted
unit	-
Windows default	0
least value	0
crest value	65535
Set and effective mode	Operation setting / shutdown takes effect
Related mode	ALL
explanatory note	In the CSP mode, only the absolute position instruction is supported Mode correlation: Both Bit 0 to bit 3 are both 1, indicating the start of operation

Bit	name	description
0	Servo ready	Setting method: 1-valid, 0-invalid
1	Connect the main circuit power	Setting method: 1-valid, 0-invalid
2	Quick shutdown	Setting method: 0-valid, 1-invalid
3	Servo operation	Setting method: 1-valid, 0-invalid
8	suspend	0: invalid. 1: Hold the servo at 605 Dh setting.

Table 3-45 Instructions to set related objects in CST mode

index of matrix	subindex	name	unit	scope	data type	accessibility	PDO
6040	00	control word	-	0~65535	UINT16	RW	RPDO
6060	00	Servo mode selection	-	0~10	INT8	RW	RPDO
6071	00	Target torque	0.1%	-5000~5000	INT16	RW	RPDO
607F	00	maximum speed	Directive unit / s	$0\sim(2^{32-1})$	UDINT32	RW	RPDO
60B2	00	Recurrent bias	0.1%	-5000~5000	INT32	RW	RPDO
60E0	00	Forward torque restriction	0.1%	0~5000	UINT16	RW	RPDO
60E1	00	Reverse torque restriction	0.1%	0~5000	UINT16	RW	RPDO
2006	01	The velocity proportional gain of 1	0.1Hz	1~20000	UINT16	RW	-
	02	The velocity-integral gain of 1	0.01ms	15~51200	UINT16	RW	-

2007	03	Recurrent filter 1	0.01ms	0~3000	UINT16	RW	-

③ Related Objects (Status * Monitoring Class)

Table 3-46 The 0x6041 status word

0x6041-Status Word	
Index-sub-index	0x6041-00
data type	UINT16
accessibility	readable
unit	-
Windows default	0
least value	0
crest value	65535
Set and effective mode	-
Related mode	ALL
explanatory note	Reaction servo state Pattern related:

Bit	name	description
10	The target torque arrives	Status display: 1-arrived, 0-not arrived
12	Follow the instructions from the station	Status display: 1-follow, 0-did not follow
15	The origin is done back to zero	Status display: 1-completed, 0-incomplete

Table 3-47 State monitors related objects in CST mode

index of matrix	subindex	name	unit	scope	data type	accessibility	PDO
6040	00	control word	RW	UINT16	-	0~65535	TPDO
603F	00	Error code	RO	UINT16	-	0~65535	TPDO
6041	00	status word	RO	UINT16	-	0~65535	TPDO
6061	00	Running mode is shown	RO	INT8	-	0~10	TPDO
606C	00	actual velocity	RO	INT32	Directive unit / s	-	TPDO
6074	00	Torque instruction	RO	INT16	0.1%	-5000~5000	TPDO
6077	00	The actual torque	RO	INT16	0.1%	-5000~5000	TPDO

④ Related functionality settings

A） rate limitation

The speed limit is determined by 607 Fh and the smaller value in the maximum motor speed;

Table 3-48 The CST mode speed limits the related objects

index of matrix	subindex	name	Set the range
607F	00	maximum speed	0-(2^32-1)

B） The torque arrived

When the difference between the torque and the base value is greater than the 2015h: 12 value, the output effectively reaches the signal TOQREACH, and the bit10 of the state word 6041 is invalid; when the difference between the torque and the base value is less than the 2015h: 13 value is invalid, and the bit10 of the state word 6041 is cleared.

Table 3-49 The CST mode torque reaches the relevant object

index of matrix	subindex	name	Set the range
2015	11	The torque reaches the base value	0-3000 (unit 0.1%)
2015	12	The torque reaches a valid value	0-3000 (unit 0.1%)
2015	13	Torque reaches an invalid value	0-3000 (unit 0.1%)

(5) Conile Position Mode (PP)

In contour position mode, the upper controller specifies the target position, contour speed, contour acceleration, contour deceleration, etc., the motor motion planning is suitable for point-to-point motion.

⚠ pay attention to:

- The minimum communication cycle of PP mode is 1ms. When set to more than 1ms, the communication cycle should be an integer multiple of the position loop control cycle (the position loop control cycle is 250 μs);
- When the PP mode switches to another mode, the unexecuted position instruction will be discarded in any state.

① Related object (instruction * setting class)

Note: For detailed instructions of related objects, see"Chapter 6: The Object Dictionary"。
General object:

Table 3-50 0x6040 control word

0x6040-Control Word	
Index-sub-index	0x6040-00
data type	UINT16
accessibility	Readable / scripted
unit	-
Windows default	0
least value	0
crest value	65535
Set and effective mode	Operation setting / shutdown takes effect
Related mode	ALL
explanatory note	In the CSP mode, only the absolute position instruction is supported Mode correlation: Both Bit 0 to bit 3 are both 1, indicating the start of operation

Bit	name	description
0	Servo ready	Setting method: 1-valid, 0-invalid
1	Connect the main circuit power	Setting method: 1-valid, 0-invalid
2	Quick shutdown	Setting method: 0-valid, 1-invalid
3	Servo operation	Setting method: 1-valid, 0-invalid
4	New target location New set-point	Effective mode: rising edge
5	Update the Change set immediately now	0: Not immediately update mode 1: Update the mode now
6	Absolute position instruction / relative position instruction abs / rel	0: Position command is the absolute position command 1: Position instruction is the relative position instruction

Table 3-51 Instruction sets related objects in PP mode

index of matrix	subindex	name	unit	scope	data type	accessibility	PDO
6040	00	control word	-	0~(2^{32-1})	UINT16	RW	RPDO
6060	00	Servo mode selection	-	0~65535	INT8	RW	RPDO
6065	00	Position deviation	Directive unit	0~65535	UDINT32	RW	RPDO

index of matrix	subindex	name	unit	scope	data type	accessibility	PDO
		with excessive threshold					
6067	00	The position reaches the threshold	Encoder unit	$-2^{31\sim(231-1)}$	UINT32	RW	RPDO
6068	00	The location reaches the window	ms	$0\sim(2^{32-1)}$	UINT16	RW	RPDO
607A	00	target location	Directive unit	$0\sim(2^{32-1)}$	INT32	RW	RPDO
6083	00	Outline acceleration	Directive unit / s^2	$0\sim(2^{32-1)}$	UDINT32	RW	RPDO
6084	00	The outline of the deceleration	Directive unit / s^2	$1\sim(2^{32-1)}$	UDINT32	RW	RPDO
6091	01	Electrical resolution	-	0~5000	UINT32	RW	RPDO
6091	02	Load axis resolution	-	0~5000	UINT32	RW	RPDO
60E0	00	Forward torque restriction	0.1%	0~3000	UINT16	RW	RPDO
60E1	00	Reverse torque restriction	0.1%	1~20000	UINT16	RW	RPDO
2006	01	The velocity proportional gain of 1	0.1Hz	0~20000	UINT16	RW	-
	02	The velocity-integral gain of 1	0.01ms	0~6400	UINT16	RW	-
	03	Position-scale gain of 1	0.1Hz	0~1000	UINT16	RW	-
	09	Speed-feedforward proportional gain	0.1%	0~2000	UINT16	RW	-
	0A	Torque-forward feed-forward proportional gain	0.1%	0~65535	UINT16	RW	-
2007	03	Recurrent filter 1	0.01ms	15~51200	UINT16	RW	-
	0 7	Speed-feedforward filtering time	0.01ms	0~6400	UINT16	RW	-
	0 8	Torque feed-forward filtering time	0.01ms	$0\sim(2^{32-1)}$	UINT16	RW	-

② Related Objects (Status * Monitoring Class)

Table 3-52 The 0x6041 status word

<table>
<tr><th colspan="2">0x6041-Status Word</th></tr>
<tr><td>Index-sub-index</td><td>0x6041-00</td></tr>
<tr><td>data type</td><td>UINT16</td></tr>
<tr><td>accessibility</td><td>readable</td></tr>
<tr><td>unit</td><td>-</td></tr>
<tr><td>Windows default</td><td>0</td></tr>
<tr><td>least value</td><td>0</td></tr>
<tr><td>crest value</td><td>65535</td></tr>
<tr><td>Set and effective mode</td><td>-</td></tr>
<tr><td>Related mode</td><td>ALL</td></tr>
<tr><td>explanatory note</td><td>Reaction servo state
Mode related: After the quick shutdown is completed, the bit10 of the status word 6041 is set 1, and the servo is in the shutdown state.
<table>
<tr><th>Bit</th><th>name</th><th>description</th></tr>
<tr><td>10</td><td>Target location arrived</td><td>Status display: 1-arrived, 0-not arrived</td></tr>
<tr><td>12</td><td>Follow the instructions from the station</td><td>Status display: 1-follow, 0-did not follow</td></tr>
<tr><td>13</td><td>Follow the mistake</td><td>Status display: 1-Error, 0-no error</td></tr>
<tr><td>15</td><td>The origin is done back to zero</td><td>Status display: 1-Completed, 0-incomplete</td></tr>
</table></td></tr>
</table>

Table 3-53 Status monitors related objects in PP mode

index of matrix	subindex	name	unit	scope	data type	accessibility	PDO
603F	00	Error code	-	0~65535	UINT16	RO	TPDO
6041	00	status word	-	0~65535	UINT16	RO	TPDO
6061	00	Running mode is shown	-	0~10	INT8	RO	TPDO
6062	00	Location instruction	Directive unit	-	DINT32	RO	TPDO
6063	00	position feedback	Encoder unit	-	INT32	RO	TPDO
6064	00	position feedback	Directive unit	-	INT32	RO	TPDO
606C	00	actual velocity	Directive unit / s	-	INT32	RO	TPDO
6077	00	The actual torque	0.1%	-5000~5000	INT16	RO	TPDO
60F4	00	position deviation	Directive unit	-	DINT32	RO	TPDO
60FC	00	Location instruction	Encoder unit	-	DINT32	RO	TPDO

③ Related functionality settings

A） Positioning completed

If the difference between the actual position and the target position is within a certain threshold range and maintained for a certain period of time, the DO is valid, and bit10=1 for 6041.

Note: Positioning the completion threshold and the completion window time, both conditions must be met simultaneously.

Related object parameters are shown in the following table:

Table 3-54 PP mode to locate the relevant objects

index of matrix	subindex	name	Set the range
2013	0C	Position to reach the threshold unit selection	0-Directive unit 1-Encoder unit
6067	00	The position reaches the threshold	0~65535
6068	00	Location arrives at the window time	0~65535

B） Position deviation with excessive threshold

When the difference between the target position and the actual position exceeds a certain threshold, the servo drive alarms.

Related object parameters are shown in the following table:

Table 3-55 PP mode position deviation is too large and correlated object

index of matrix	subindex	name	Set the range
6065	00	Position deviation with excessive threshold	0~(2^{32-1})

C） rate limitation

The speed limit is determined by 607 Fh and the smaller value in the maximum motor speed;

Table 3-56 PP mode speed limits related objects

index of matrix	subindex	name	Set the range
607F	00	maximum speed	0-(2^{32-1})

④ PP action example

A） Case 1: Basic set-po int

1: The upper controller enters a new target position command;

2:6040h control word bit4 (New set-point) set 1;

3: from the station in 6040h control word bit4 up along the receive position command, and start positioning, and then put the 6041h state word bit12 (Set-po int acknowledge) into 1;

4: the main station confirms that 6041h state word bit12 has been set 1, then 6040h control word bit4 set 0, can receive new position instructions;

5: from the station confirmation 6040h control word bit4 has been set 0,6041h state word bit12 set 0;

6: positioning is completed, 6041h state word bit10 positioning is completed 1.

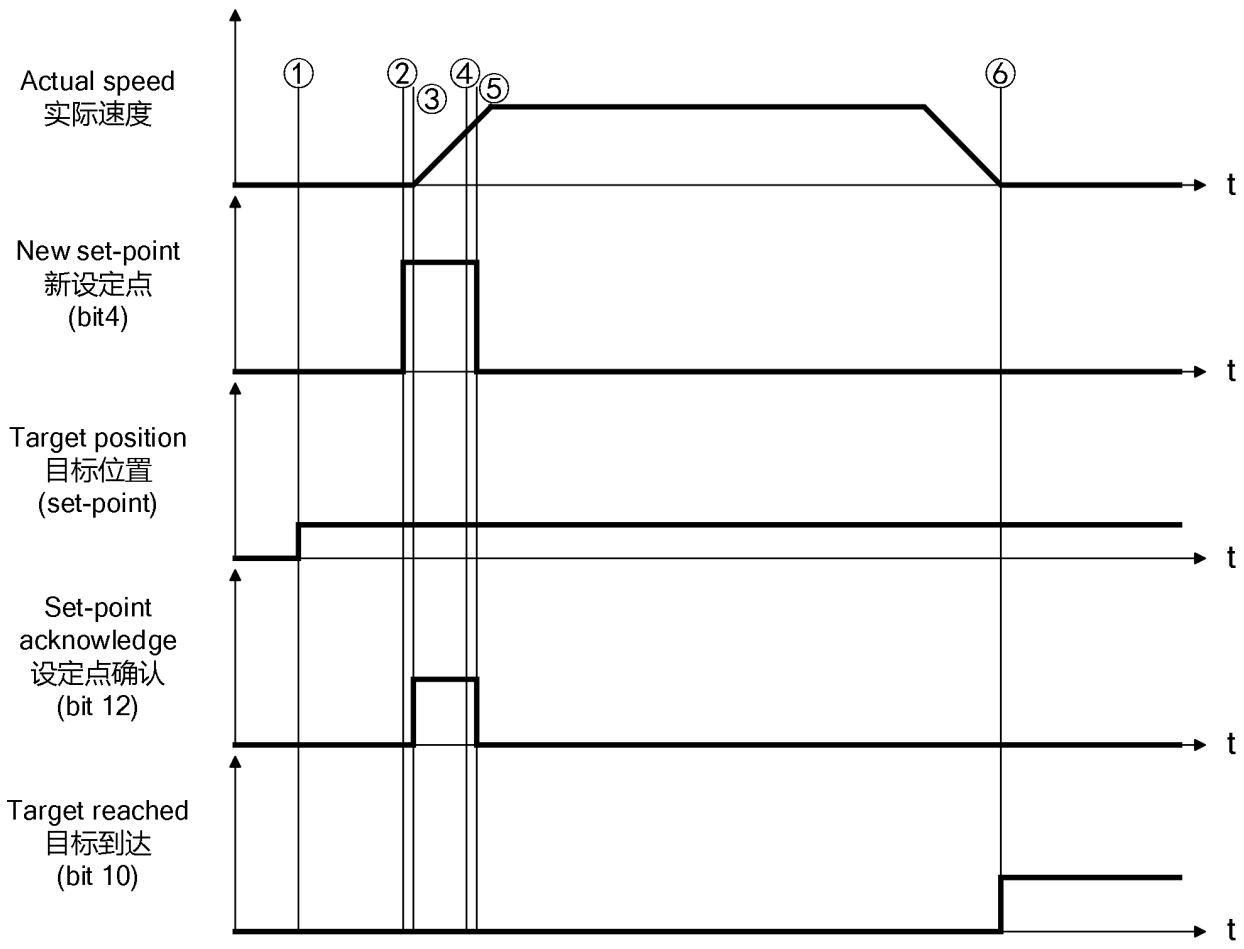

Figure 3-49 The PP mode is the basic set-point

B） Case 2: set of set-point (not immediate update mode)

1: the upper controller to input the target position command;

2:6040h control word bit4 (New set-point) set 1;

3: from the station in 6040h control word bit4 up along the receive position command, and start positioning, and then the 6041h state word bit12 (Set-point acknowledge) set 1;

4: The main station confirms that the 6041h status word bit12 has been placed into 1, and then sets the 6040h control word bit4 into 0 to receive new position instructions;

5: from the station confirmation 6040h control word bit4 has been set 0. then 6041h state word bit12 set 0;

6: Upper controller to input the target position instruction;

7:6040h control word bit4 (New set-point) set 1;

8: from the 6040h control word bit4 rise along the receiving position command, but did not start to locate, and then put the 6041h state word bit12 (Set-point acknowledge) into 1;

9: The main station confirms that 6041h status word bit12 has been set 1, then 6040h control word bit4 set 0, can receive new position instructions;

A: After the first position command is completed, the servo motor will down, set the 6041h status word bit12 into 0, and start A new positioning;

B: Positioning is complete, 6041h state word bit10 positioning is complete 1.

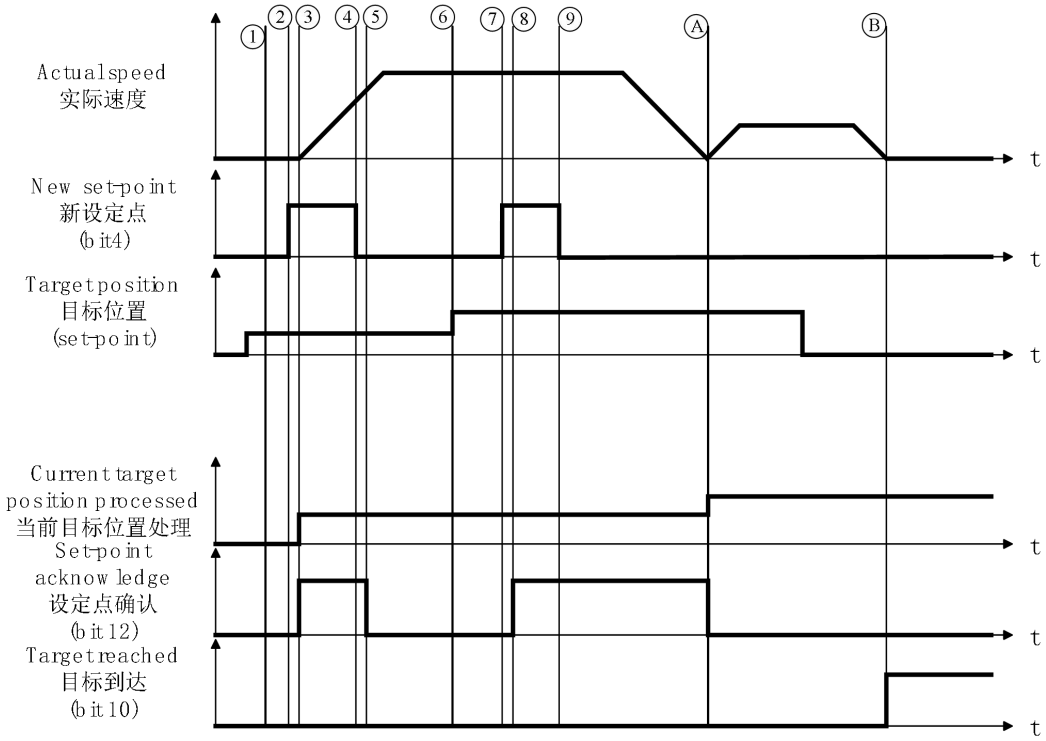

Figure 3-50 PP mode set of set-point (non-immediate update mode)

C） ase 3: Single set-PoINT (Update mode now)

1: the upper controller to input the target position command;

2:6040h control word bit4 (New set-point) set 1;

3: from the station in 6040h control word bit4 up along the receive position command, and start positioning, and then put the 6041h state word bit12 (Set-point acknowledge) into 1;

4: The main station confirms that the 6041h status word bit12 has been placed 1, and then the 6040h control word bit4 is placed 0 to receive new position instructions;

5: from the station confirmation 6040h control word bit4 has been set 0. then 6041h state word bit12 set 0;

6: Upper controller to input the target position instruction;

7:6040h control word bit4 (New set-point) set 1;

8: From the station at 6040h control word bit4 rise along the receiving position command, start the new command (contour speed, acceleration and deceleration, etc.), and then put the 6041h state word bit12 (Set-point acknowledge) into 1;

9: The main station confirms that 6041h state word bit12 has been set 1, then 6040h control word bit4 set 0, can receive new position instructions;

A: from the station to confirm that 6040h control word bit4 has been set 0. then 6041h state word bit12 set 0;

B: Positioning is completed, 6041h state word bit10 positioning is completed set 1.

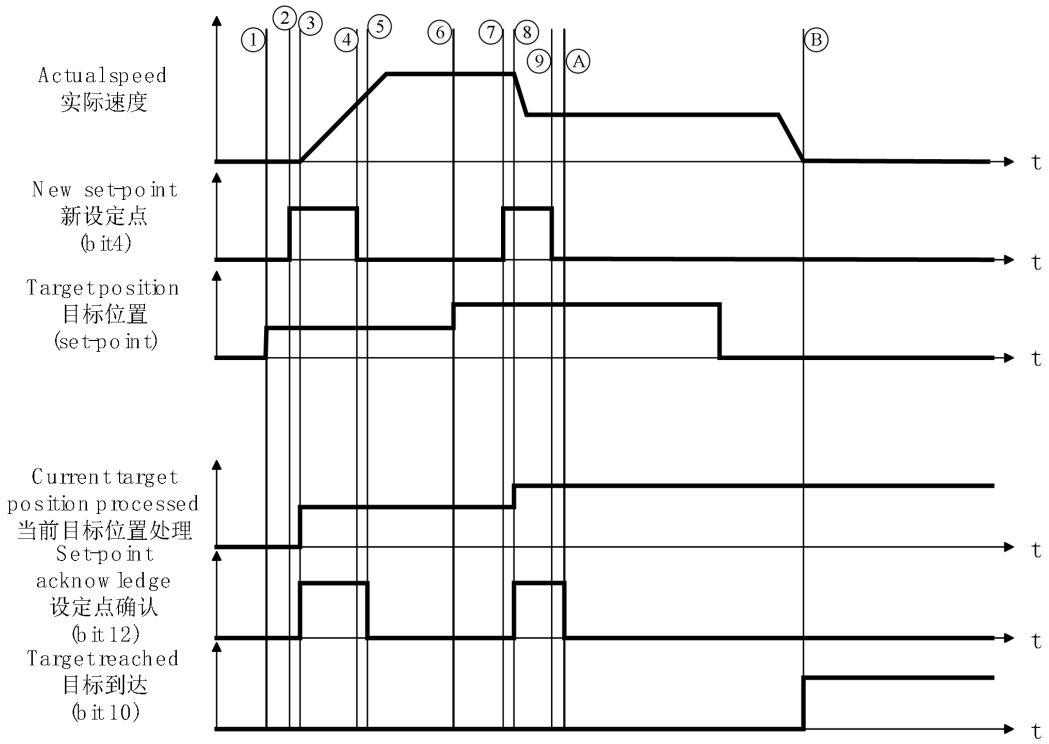

Figure 3-51 PP mode Single set-Point (update mode now)

D） ase 4: Relative movement versus absolute movement

CSP mode only supports absolute position command, and PP mode supports absolute position command and relative position command.

Absolute position instruction: After the servo driver receives the position instruction, it will drive the motor to make the actual position of the feedback consistent with the target position. After the positioning is completed, the actual position of the servo motor is always consistent with the target position.

Relative position instruction: After the servo driver receives the position instruction, it will drive the motor to make the actual position increment of the motor feedback consistent with the target position. After the positioning is completed, the actual position of the servo motor is not necessarily consistent with the target position.

(6) Conile Speed Mode (PV)

In the contour speed mode, the upper controller specifies the target speed, contour acceleration, contour deceleration, etc., and performs the motor motion planning inside the servo driver.

⚠ pay attention to:

- The minimum communication period of PV mode is 500 μ s;
- When PV mode switches to other mode, perform ramp shutdown in any state. After the shutdown is completed, you can cut to other mode.

① Related object (Instruction * setting class)

Note: For detailed instructions for related objects, see"Chapter 6: The Object Dictionary"。
General object:

Table 3-57 0x6040 control word

0x6040-Control Word	
Index-sub-index	0x6040-00
data type	UINT16
accessibility	Readable / scripted
unit	-
Windows default	0
least value	0
crest value	65535
Set and effective mode	Operation setting / shutdown takes effect
Related mode	ALL
explanatory note	In the CSP mode, only the absolute position instruction is supported Mode correlation: Both Bit 0 to bit 3 are both 1, indicating the start of operation

Bit	name	description
0	Servo ready	Setting method: 1-valid, 0-invalid
1	Connect the main circuit power	Setting method: 1-valid, 0-invalid
2	Quick shutdown	Setting method: 0-valid, 1-invalid
3	Servo operation	Setting method: 1-valid, 0-invalid
8	suspend	0: invalid. 1: Hold the servo at 605 Dh setting.

Table 3-58 Instructions to set related objects in PV mode

index of matrix	subindex	name	unit	scope	data type	accessibility	PDO
6040	00	control word	-	0~65535	UINT16	RW	RPDO
6060	00	Servo mode selection	-	0~10	INT8	RW	RPDO
607F	00	Maximum contour speed	Directive unit / s	$0\sim(2^{32-1})$	UINT32	RW	RPDO
60FF	00	Target speed	Directive unit / s	$-2^{31\sim(231-1)}$	INT32	RW	RPDO
60E0	00	Forward torque restriction	0.1%	0~5000	UINT16	RW	RPDO
60E1	00	Reverse torque	0.1%	0~5000	UINT16	RW	RPDO

		restriction					
2006	01	The velocity proportional gain of 1	0.1Hz	1~20000	UINT16	RW	-
	02	The velocity-integral gain of 1	0.01ms	15~51200	UINT16	RW	-
	0A	Torque-forward feed-forward proportional gain	0.1%	0~2000	UINT16	RW	-
2007	03	Recurrent filter 1	0.01ms	0~3000	UINT16	RW	-
	0 8	Torque feed-forward filtering time	0.01ms	0~6400	UINT16	RW	-

② Related Objects (Status * Monitoring Class)

Table 3-59 The 0x6041 status word

0x6041-Status word	
Index-sub-index	0x6041-00
data type	UINT16
accessibility	readable
unit	-
Windows default	0
least value	0
crest value	65535
Set and effective mode	-
Related mode	PST
explanatory note	Reaction servo state Pattern related:

Bit	name	description
10	Target speed reaches	Status display: 1-arrived, 0-not arrived
11	The internal position of the software is overrun	Status display: 1-no limit, 0-no limit
15	The origin is done back to zero	Status display: 1-completed, 0-incomplete

Table 3-60 Status monitors related objects in PV mode

index of matrix	subindex	name	unit	scope	data type	accessibility	PDO
603F	00	Error code	-	0~65535	UINT16	RO	TPDO
6041	00	status word	-	0~65535	UINT16	RO	TPDO
6061	00	Running mode is shown	-	0~10	INT8	RO	TPDO
6063	00	position feedback	Encoder unit	-	INT32	RO	TPDO
6064	00	position feedback	Directive unit	-	INT32	RO	TPDO
606C	00	actual	Directive	-	INT32	RO	TPDO

		velocity	unit / s				
6077	00	The actual torque	0.1%	-5000~5000	INT16	RO	TPDO

③ Related functionality settings

A） rate limitation

The speed limit is determined by 607 Fh and the smaller value in the maximum motor speed;

Table 3-61 PV mode speed limits related objects

index of matrix	subindex	name	Set the range
607F	00	maximum speed	0-(2^{32-1})

B） Speed reaches function

If the difference between the target speed and the actual speed is within a certain threshold and remains for a period of time, the speed reaches the DO valid, and the bit10=1 of the state word 6041 is valid.

Related object parameters are shown in the following table:

Table 3-62 The PV mode speed reaches the function-related object

index of matrix	subindex	name	Set the range
606D	00	The speed reaches the threshold	0~65535
606E	00	Speed reaches the window time	0~65535

(7) Profile Torque Mode (PT)

In the contour torque mode, the upper controller specifies the target torque, torque slope, etc., and the servo driver conducts the motor motion planning inside.

⚠ pay attention to:

- The minimum communication period of PT mode is 125 μ s;
- When PT mode switches to other mode, perform ramp shutdown under any state. After the shutdown, you can cut into other modes;
- In CST mode, speed control occurs when the speed reaches the limit value.

① Related object (Instruction * setting class)

Note: For detailed instructions for related objects, see"Chapter 6: The Object Dictionary"。

General object:

Table 3-63 The 0x6040 control word

0x6040-Control Word	
Index-sub-index	0x6040-00
data type	UINT16
accessibility	Readable / scripted
unit	-
Windows default	0
least value	0
crest value	65535
Set and effective mode	Operation setting / shutdown takes effect
Related mode	ALL
explanatory note	In the CSP mode, only the absolute position instruction is supported Mode correlation: Both bit 0 to bit 3 are 1, indicating the start of operation

Bit	name	description

	0	Servo ready	Setting method: 1-valid, 0-invalid
	1	Connect the main circuit power	Setting method: 1-valid, 0-invalid
	2	Quick shutdown	Setting method: 0-valid, 1-invalid
	3	Servo operation	Setting method: 1-valid, 0-invalid
	8	suspend	0: invalid. 1: Hold the servo at 605 Dh setting.

Table 3-64 Instructions to set related objects in PT mode

index of matrix	subindex	name	unit	scope	data type	accessibility	PDO
6040	00	control word	-	0~65535	UINT16	RW	RPDO
6060	00	Servo mode selection	-	0~10	INT8	RW	RPDO
6071	00	Target torque	0.1%	-5000~5000	INT16	RW	RPDO
6072	00	maximum torque	0.1%	0~5000	UINT16	RW	RPDO
607F	00	Maximum contour speed	Directive unit / s	$0\sim(2^{32-1})$	UINT32	RW	RPDO
6087	00	Torque slope	0.1%/s	$0\sim(2^{32-1})$	UDINT32	RW	RPDO
2007	03	Recurrent filter 1	0.01ms	0~3000	UINT16	RW	-

② **Related Objects (Status * Monitoring Class)**

Table 3-65 The 0x6041 status word

0x6041-Status word	
Index-sub-index	0x6041-00
data type	UINT16
accessibility	readable
unit	-
Windows default	0
least value	0
crest value	65535
Set and effective mode	-
Related mode	ALL
explanatory note	Reaction servo state Pattern related:

Bit	name	description
10	The target torque arrives	Status display: 1-arrived, 0-not arrived
11	The internal position of the software is overrun	Status display: 1-limit, 0-no limit
15	The origin is done back to zero	Status display: 1-Completed, 0-incomplete

Table 3-66 State monitors related objects in PT mode

index of matrix	subindex	name	unit	scope	data type	accessibility	PDO
603F	00	Error code	-	0~65535	UINT16	RO	TPDO
6041	00	status word	-	0~65535	UINT16	RO	TPDO
6061	00	Running mode is shown	-	0~10	INT8	RO	TPDO
606C	00	actual velocity	Directive unit / s	-	INT32	RO	TPDO
6074	00	Torque instruction	0.1%	-	INT16	RO	TPDO
6077	00	The actual torque	0.1%	-	INT16	RO	TPDO

③ Related functionality settings

A） rate limitation

The speed limit in the PT mode was set from 2007-12h.

Table 3-67 PT mode speed limits related objects

P15.03-Speed limit source selection	
Index-sub-index	0x2015-04
data type	UINT16
accessibility	Readable / scripted
unit	1
Windows default	0
least value	0
crest value	65535
Set and effective mode	Operation setting / shutdown takes effect
Related mode	ALL
explanatory note	

set value	description	
0	Internal speed limit	Forward speed limit: P15.05 Reverse speed limit: P15.06
1	EtherCAT External speed limit	Forward speed limit: min {607 Fh, P15.07} Reverse speed limit: min {607 Fh, P15.08}
2	Speed limitation via the DI function 13	DI (function 13): forward and reverse speed is limited by P15.11 The DI (function 13) is valid: the forward and reverse speed is limited by P15.12

B） The torque arrived

When the difference between the torque and the reference value is greater than the P15.17 value, the bit10 sets 1; when the difference between the torque and the base value is less than the value of P15.18, and the bit10 of the status word 6041 is cleared.

Table 3-68 The PT mode torque reaches the relevant object

index of matrix	subindex	name	Set the range
2015	11	The torque reaches the base value	0-3000 (unit 0.1%)
2015	12	The torque reaches a valid value	0-3000 (unit 0.1%)
2015	13	Torque reaches an invalid value	0-3000 (unit 0.1%)

C） torque limitation

Torque limit is the maximum limit of servo output torque, which is suitable for position, speed and torque mode.

Table 3-69 P15.03 Torque limiting source selection

P15.03 Torque limiting source selection	
Index-sub-index	0x2015-04
data type	UINT16
accessibility	Readable / scripted
unit	1

<table>
<tr><td>Windows default</td><td>2</td></tr>
<tr><td>least value</td><td>0</td></tr>
<tr><td>crest value</td><td>4</td></tr>
<tr><td>Set and effective mode</td><td>Operation setting / shutdown takes effect</td></tr>
<tr><td>Related mode</td><td>ALL</td></tr>
<tr><td>explanatory note</td><td>Torque limit source selection
<table>
<tr><th>set value</th><th>description</th></tr>
<tr><td>0</td><td>Forward turn internal torque limit: P15.05
Reverse the internal torque limit: P15.06</td></tr>
<tr><td>1</td><td>Forward rotation and external torque limit:
When the P-CL is valid: P15.07
When the P-CL is invalid: P15.05
Reverse the external torque limit:
N-CL effective: P15.08
When the N-CL is invalid: P15.06</td></tr>
<tr><td>2</td><td>Forward torque limit: minimum in 6072h, 60E0h
Reverse torque limit: minimum value in 6072h, 60E1h</td></tr>
<tr><td>3</td><td>Forward torque limit:
When P-CL is valid: P15.07,6072h, the minimum value in 60E0h
When P-CL is invalid: the minimum value in 6072h, 60E0h
Reverse-back torque limit:
When N-CL is valid: P15.08,6072h, the minimum value in 60E1h
When N-CL is invalid: the minimum value in 6072h, 60E1h</td></tr>
<tr><td>4</td><td>Forward torque limit:
When P-CL is valid: the minimum value in 6072h, 60E0h
When the P-CL is invalid: P15.05
Reverse-back torque limit:
When N-CL is valid: the minimum value in 6072h, 60E1h
When the N-CL is invalid: P15.06</td></tr>
</table></td></tr>
</table>

(8) Back to zero mode (HM)

Back to zero mode refers to the operation mode in which the servo driver, given the action speed, locates the mechanical origin according to the external signal.

- After returning to zero, the motor actual-position feedback = 607 Ch (origin bias);
- The mechanical origin can correspond to the origin switch signal, positive and negative limit switch, motor Z signal;
- There are many kinds of mechanical return to zero mode. If the mechanical connection of the motor and the equipment cannot be disconnected in actual use, please refer to it"Return to zero way introduction"Select the appropriate zero mode to avoid damage to the equipment; if the upper controller is used to return zero, the zero mode in this chapter is no longer applicable, please refer to the relevant zero mode of the upper controller;
- When the servo is in return zero mode and running, enter no other mode; when return zero is complete or interrupted (failure or enabling invalid);
- Please note the distance between the limit switch and the positive and negative limit switch, not too close, and the appropriate acceleration must be set, otherwise it may lead to the collision machine!

① Control block diagram

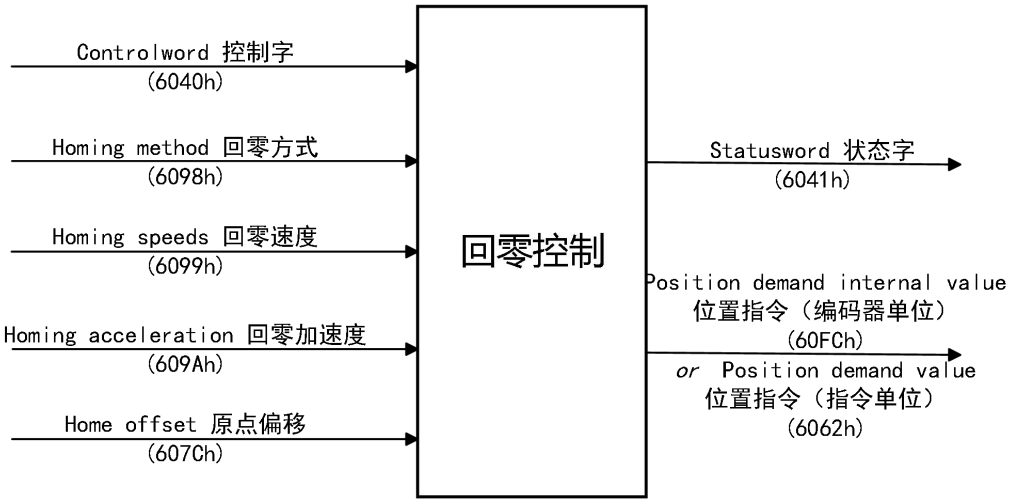

Figure 3-52 Back to the zero-mode control block diagram

② Related object (Instruction * setting class)

Note: For detailed instructions of related objects, see"Chapter 6: The Object Dictionary"。
General object:

Table 3-70 0x6040 control word

<table>
<tr><th colspan="2">0x6040-Control Word</th></tr>
<tr><td>Index-sub-index</td><td>0x6040-00</td></tr>
<tr><td>data type</td><td>UINT16</td></tr>
<tr><td>accessibility</td><td>Readable / scripted</td></tr>
<tr><td>unit</td><td>-</td></tr>
<tr><td>Windows default</td><td>0</td></tr>
<tr><td>least value</td><td>0</td></tr>
<tr><td>crest value</td><td>65535</td></tr>
<tr><td>Set and effective mode</td><td>Operation setting / shutdown takes effect</td></tr>
<tr><td>Related mode</td><td>ALL</td></tr>
<tr><td>explanatory note</td><td>In the CSP mode, only the absolute position instruction is supported
Mode correlation: Bit 0 to bit 3 are 1, indicating startup
<table>
<tr><th>Bit</th><th>name</th><th>description</th></tr>
<tr><td>0</td><td>Servo ready</td><td>Setting method: 1-valid, 0-invalid</td></tr>
<tr><td>1</td><td>Connect the main circuit power</td><td>Setting method: 1-valid, 0-invalid</td></tr>
<tr><td>2</td><td>Quick shutdown</td><td>Setting method: 0-valid, 1-invalid</td></tr>
<tr><td>3</td><td>Servo operation</td><td>Setting method: 1-valid, 0-invalid</td></tr>
<tr><td>4</td><td>Start back to zero</td><td>Start back to zero: rising edge
End back to zero: descending edge
Back to zero in progress: hold at 1</td></tr>
<tr><td>8</td><td>suspend</td><td>0: invalid.
1: Hold the servo at 605 Dh setting.</td></tr>
</table></td></tr>
</table>

Table 3-71 Into sets related objects in zero mode

index of matrix	subindex	name	unit	scope	data type	accessibility	PDO
6040	00	control word	-	0~65535	UINT16	RW	RPDO
6060	00	Servo mode selection	-	0~10	INT8	RW	RPDO
6067	00	The position reaches the threshold	Encoder unit	0~65535	UINT32	RW	RPDO
6068	00	The location reaches the window	ms	0~65535	UINT16	RW	RPDO
6098	00	Method of origin complex	-	-2~35	INT8	RW	RPDO
6099	01	High-speed search for deceleration points	Directive unit / s	$0\sim(2^{32-1})$	UINT32	RW	RPDO
	02	Search for	Directive	$10\sim(2^{32-1})$	UINT32	RW	RPDO

		the origin of low speed	unit / s				
609A	00	accelerated speed	Directive unit / s^2	0~(2^{32-1})	UDINT32	RW	RPDO
2013	32	Timeout time	10ms	100~65535	UINT16	RW	-

③ **Related Objects (Status * Monitoring Class)**

Table 3-72 The 0x6041 status word

0x6041-Status word	
Index-sub-index	0x6041-00
data type	UINT16
accessibility	readable
unit	-
Windows default	0
least value	0
crest value	65535
Set and effective mode	-
Related mode	ALL
explanatory note	Reaction servo state Pattern related:

Bit	name	description
10	Target location arrived	Status display: 1-arrived, 0-not arrived
12	Back to zero end	Status display: 1-successful, 0-unsuccessful
13	Back to zero error	Status display: 1-Error, 0-no error
15	The origin is done back to zero	Status display: 1-completed, 0-incomplete

Table 3-73 State monitors related objects in back to zero mode

index of matrix	subindex	name	unit	scope	data type	accessibility	PDO
603F	00	Error code	-	0~65535	UINT16	RO	TPDO
6041	00	status word	-	0~65535	UINT16	RO	TPDO
6061	00	Running mode is shown	-	0~10	INT8	RO	TPDO
6062	00	physical location	Directive unit	-	INT32	RO	TPDO
6064	00	position feedback	Directive unit	-	INT32	RO	TPDO
6077	00	The actual torque	0.1%	-5000~5000	INT16	RO	TPDO
606C	00	actual velocity	Directive unit / s	-	INT32	RO	TPDO
60F4	00	position deviation	Directive unit	-	UINT16	RO	TPDO

④ Related functionality settings

A） Back to zero time limit

The return zero time limit in return zero mode is set by P13.49 with return zero time out warning (A.425).

Table 3-74 Origin return time limit related object

index of matrix	subindex	name	Set the range
2013	32	Back to zero timeout	0-65535 (in 10ms)

B） Position calculation method after the return to zero

After the completion of returning to zero mode, the servo motor position is the mechanical origin, and the position feedback value can be set in different calculation methods through 60E6h, as shown in the following table. Different calculation methods are applicable to different industrial machinery.

Table 3-75 0x60E6, position calculation method

0x60E6-Position calculation method	
Index-sub-index	0x60E6-00
data type	UINT8
accessibility	Readable / scripted
unit	1
Windows default	0
least value	0
crest value	1
Set and effective mode	Operation setting / shutdown takes effect
Related mode	HM
explanatory note	set value: description 0: After returning to zero, the actual positional feedback value of the origin position is the origin bias 607C 1: After returning to zero, the actual position feedback value of the origin position is the original position feedback 6064 + origin bias 607C

⑤ Introducing back to zero

A） Back to zero speed setting

Table 3-76 Back to zero speed setting of related objects

index of matrix	subindex	name	Set the range
6099	01h	High-speed search for deceleration points	0~(2^{32-1})
	02h	Low speed search origin	0~(2^{32-1})

Note: The high-speed operation in the following action description refers to the operation at the speed set at 6099-01h, and the low-speed operation refers to the operation at the speed set at 6099-02h. It can be understood like this: high speed operation to look for the deceleration point, find the deceleration point, low speed operation to find the origin.

I) Way 1:

Table 3-77 Origin return mode 1

<table>
<tr><td>movement block diagram</td><td colspan="2"> 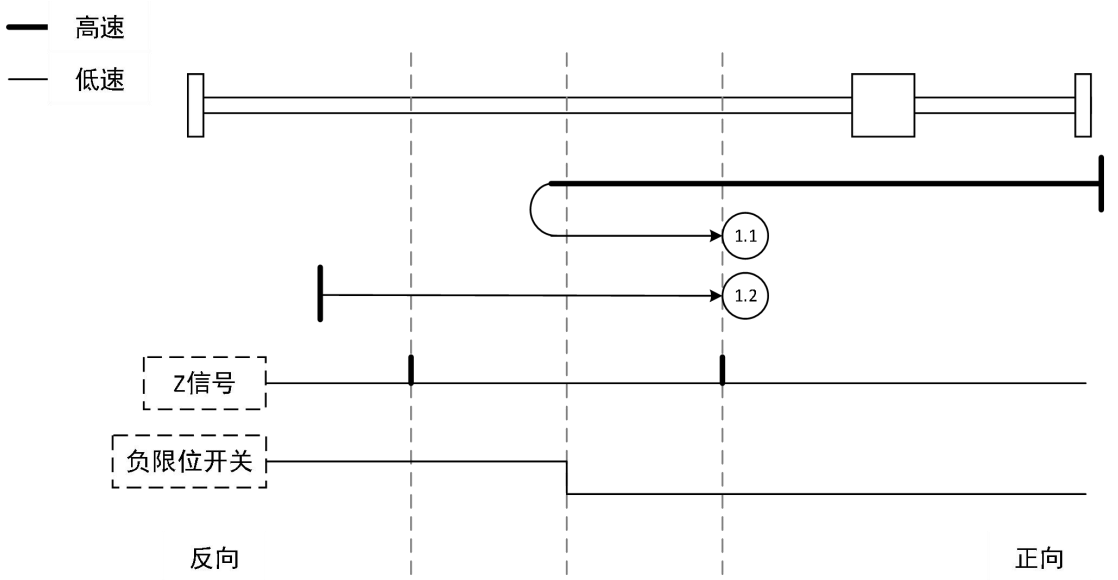
</td></tr>
<tr><td>framing signal</td><td>origin</td><td>Slow down the point</td></tr>
<tr><td></td><td>Z believe the number</td><td>Negative limit switch</td></tr>
<tr><td rowspan="4">Way 1</td><td colspan="2">Action description</td></tr>
<tr><td colspan="2">Note: Different initial conditions, different movements</td></tr>
<tr><td>initial condition</td><td>Back to zero action</td></tr>
<tr><td>1.1-The deceleration point at zero time is invalid</td><td>At the beginning of zero time, the reverse high speed operation, after the upward edge of the reverse limit signal, the signal runs at the forward low speed, and the first Z believe signal after the downward edge of the reverse limit signal stops</td></tr>
<tr><td></td><td>1.2-Effective deceleration point back to zero time</td><td>At the beginning of zero back to zero, the first Z signal shutdown after the reverse limit signal drops</td></tr>
</table>

II) Way 2:

Table 3-78 Origin return mode 2

<table>
<tr><td>movement block diagram</td><td colspan="2"> 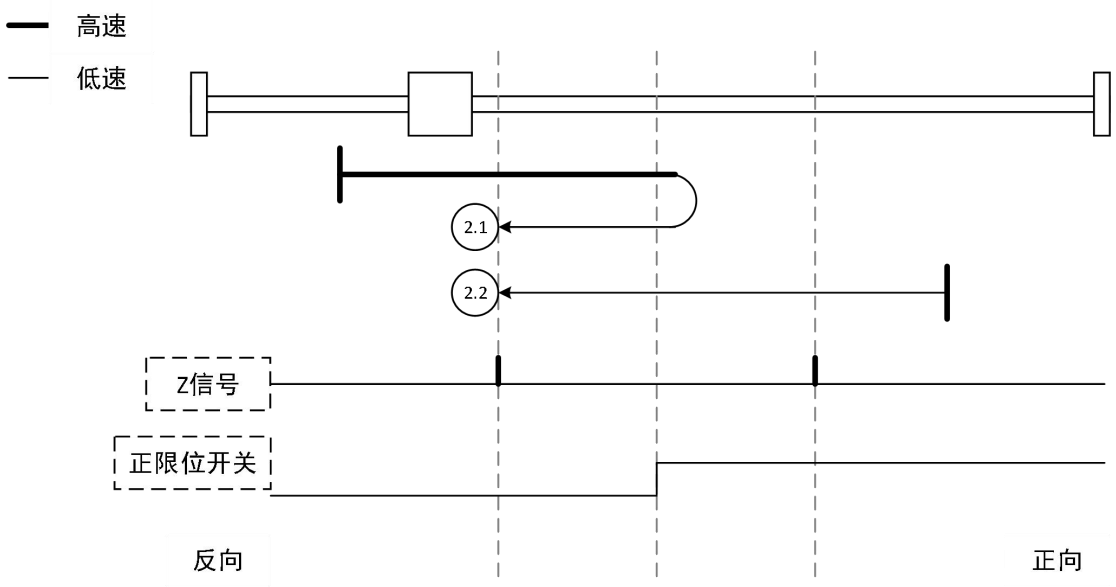
</td></tr>
<tr><td>framing signal</td><td>origin</td><td>Slow down the point</td></tr>
<tr><td></td><td>Z believe the number</td><td>Forward limit switch</td></tr>
<tr><td rowspan="4">Way 2</td><td colspan="2">Action description</td></tr>
<tr><td colspan="2">Note: Different initial conditions, different movements</td></tr>
<tr><td>initial condition</td><td>Back to zero action</td></tr>
<tr><td>2.1-The deceleration point back to zero hour is invalid</td><td>At zero, the forward runs at high speed. After the positive limit signal rise edge, the reverse runs at low speed, and the first Z believe signal stops after the positive limit signal fall edge</td></tr>
<tr><td></td><td>2.2-Effective deceleration point back to zero time</td><td>Start back to zero, directly start the reverse low speed back to zero, and encounter the first Z believe signal shutdown after the forward limit signal drop edge</td></tr>
</table>

III) Way 3-4:

Table 3-79 Origin return mode 3-4

<table>
<tr><td>movement block diagram</td><td colspan="2"> 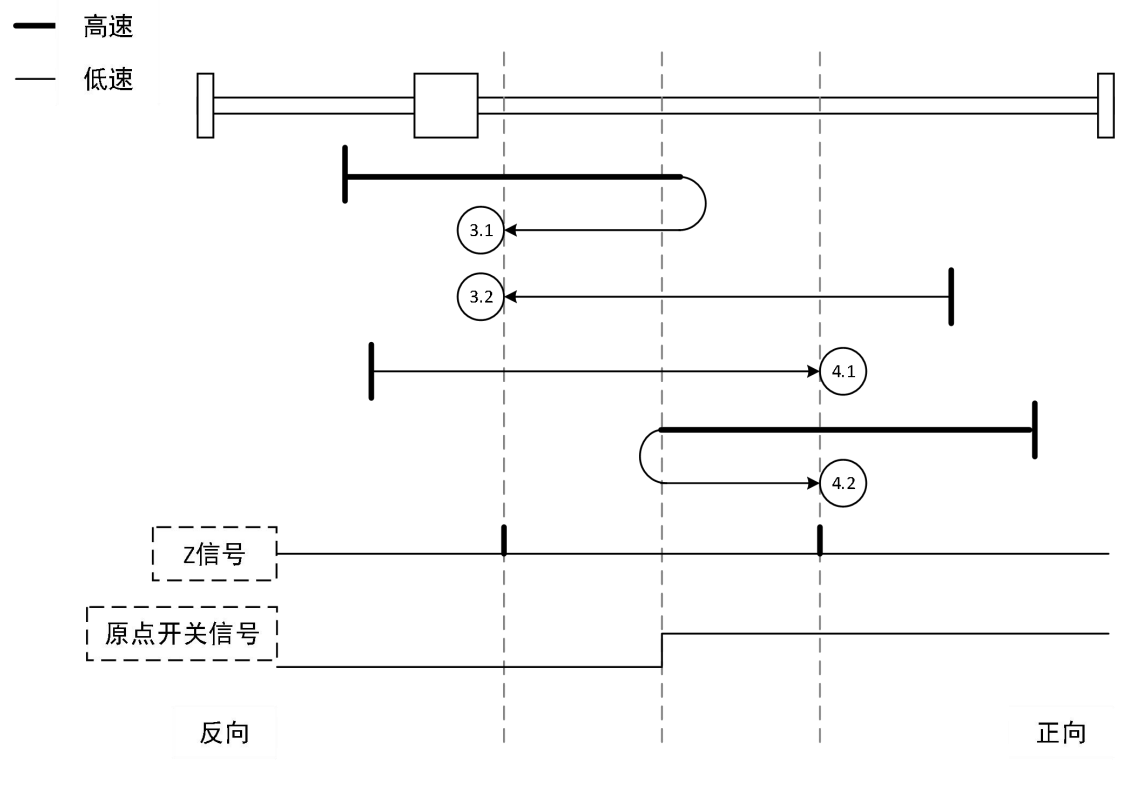
</td></tr>
<tr><td>framing signal</td><td colspan="2"><table>
<tr><td>origin</td><td>Slow down the point</td></tr>
<tr><td>Z believe the number</td><td>Origin switch signal</td></tr>
</table></td></tr>
<tr><td rowspan="4">Way 3</td><td colspan="2">Action description</td></tr>
<tr><td colspan="2">Note: Different initial conditions, different movements</td></tr>
<tr><td colspan="2"><table>
<tr><td>initial condition</td><td>Back to zero action</td></tr>
<tr><td>3.1-The deceleration point back to zero hour is invalid</td><td>At zero, the forward is running at high speed. After the origin switch signal rises, the reverse is running at low speed, and the first Z signal stops after the origin switch signal goes down</td></tr>
<tr><td>3.2-Effective deceleration point back to zero time</td><td>Start back to zero directly start the reverse low speed back to zero, the first Z signal after the origin switch signal drop down</td></tr>
</table></td></tr>
<tr><td rowspan="4">Way 4</td><td colspan="2">Action description</td></tr>
<tr><td colspan="2">Note: Different initial conditions, different movements</td></tr>
<tr><td colspan="2"><table>
<tr><td>initial condition</td><td>Back to zero action</td></tr>
<tr><td>4.1-The deceleration point back to zero hour is invalid</td><td>At the beginning of zero, the first Z believe signal will stop after the rising edge of the origin switch signal</td></tr>
<tr><td>4.2-Effective deceleration point back to zero time</td><td>Back to zero, reverse operation at high speed. After the origin switch signal drops, the signal is running at low speed, and the first Z believe signal stops after the origin switch signal rises</td></tr>
</table></td></tr>
</table>

IV) Way 5-6:

Table 3-80 Origin return mode 5-6

<table>
<tr><td>movement block diagram</td><td colspan="2"> 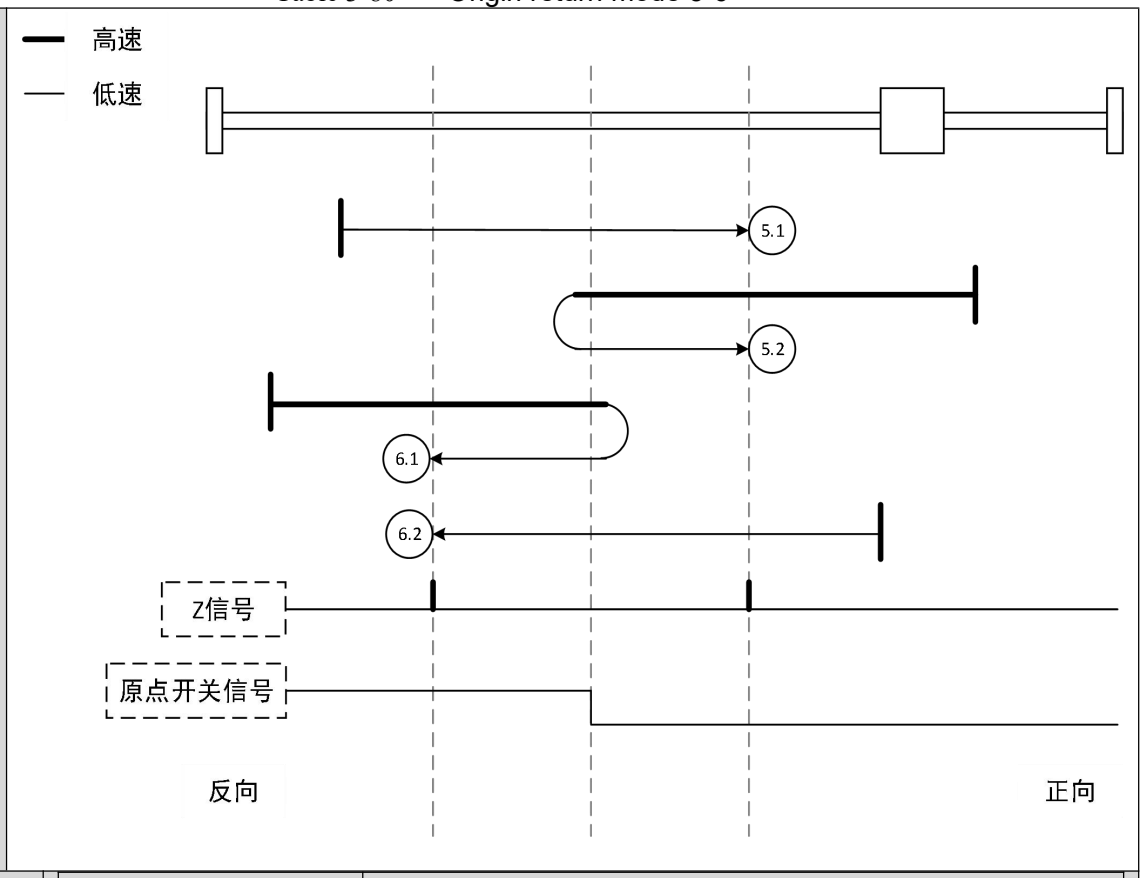
</td></tr>
<tr><td>framing signal</td><td colspan="2"><table>
<tr><th>origin</th><th>Slow down the point</th></tr>
<tr><td>Z believe the number</td><td>Origin switch signal</td></tr>
</table></td></tr>
<tr><td rowspan="3">Way 5</td><td colspan="2">Action description</td></tr>
<tr><td colspan="2">Note: Different initial conditions, different movements</td></tr>
<tr><td colspan="2"><table>
<tr><th>initial condition</th><th>Back to zero action</th></tr>
<tr><td>5.1-The deceleration point back to zero time is valid</td><td>At the beginning of zero, the first Z signal shutdown after the origin switch signal drops</td></tr>
<tr><td>5.2-The deceleration point back to zero hour is invalid</td><td>Back to zero, the reverse high speed operation, after the origin switch signal rising edge, the forward operation at low speed, and the first Z signal after the origin switch signal falling edge</td></tr>
</table></td></tr>
<tr><td rowspan="3">Way 6</td><td colspan="2">Action description</td></tr>
<tr><td colspan="2">Note: Different initial conditions, different movements</td></tr>
<tr><td colspan="2"><table>
<tr><th>initial condition</th><th>Back to zero action</th></tr>
<tr><td>6.1-Effective deceleration point back to zero time</td><td>At zero, the forward is running at high speed. After the origin switch signal drops, the reverse is running at low speed, and the first Z stops after the origin switch signal rises</td></tr>
<tr><td>6.2-The deceleration point back to zero hour is invalid</td><td>Start back to zero directly start the reverse low speed back to zero, the first Z believe signal after the origin switch signal rising edge shutdown</td></tr>
</table></td></tr>
</table>

V) Method # 7-10:

Table 3-81 Origin return mode 7-10

<table>
<tr><td>movement block diagram</td><td colspan="2"> 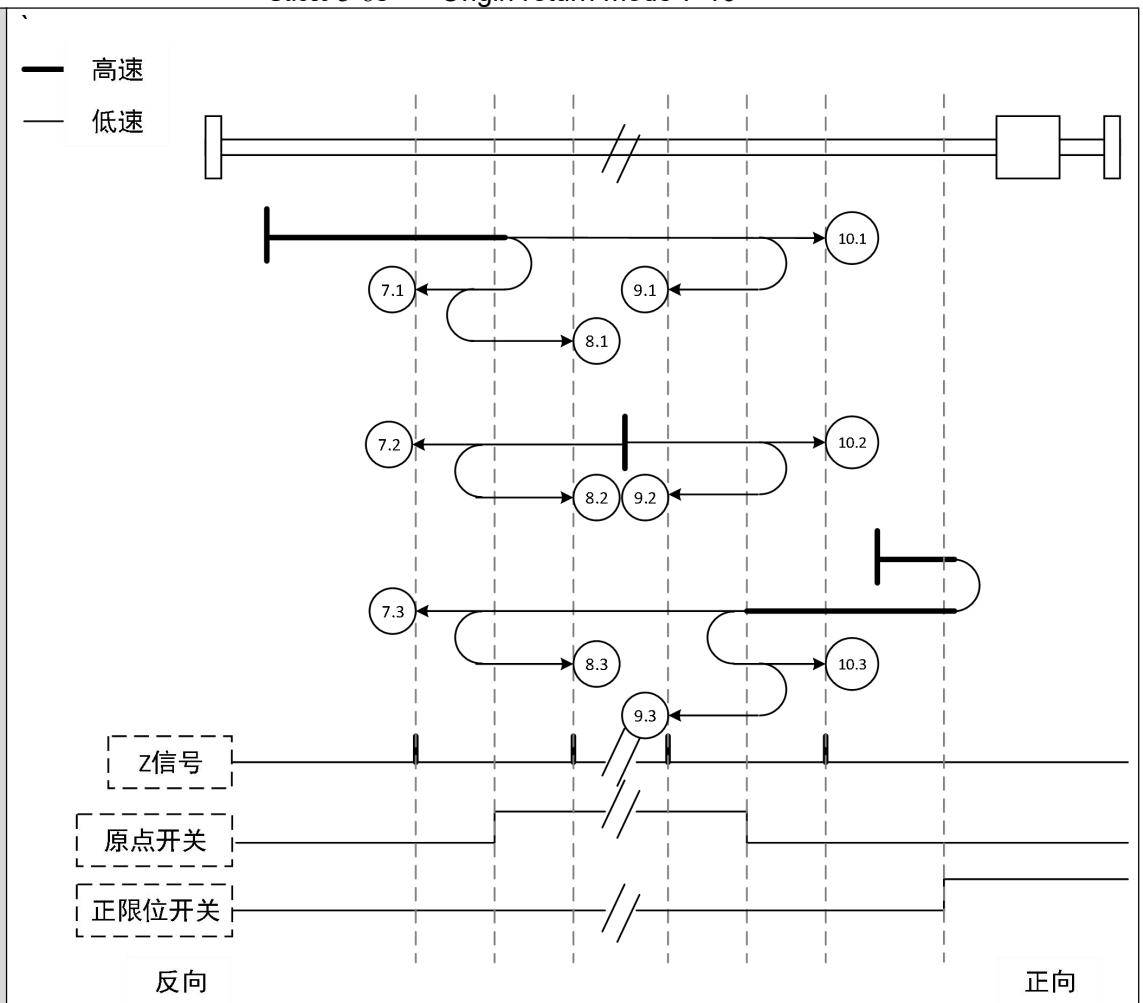
</td></tr>
<tr><td>framing signal</td><td colspan="2"><table>
<tr><td>origin</td><td>Slow down the point</td></tr>
<tr><td>Z believe the number</td><td>Origin switch signal</td></tr>
</table></td></tr>
<tr><td rowspan="2">Way 7</td><td colspan="2">Action description</td></tr>
<tr><td colspan="2">Note: Different initial conditions, different movements
<table>
<tr><td>initial condition</td><td>Back to zero action</td></tr>
<tr><td>7.1-The deceleration point at zero time is invalid, and no positive limit switch is encountered in the process</td><td>At zero, the forward is running at high speed. After the origin switch signal rises, the reverse is running at low speed, and the first Z signal stops after the origin switch signal goes down</td></tr>
<tr><td>7.2-Effective deceleration point back to zero time</td><td>Start back to zero directly start the reverse low speed back to zero, the first Z signal after the origin switch signal drop down</td></tr>
<tr><td>7.3-The deceleration point at zero time is invalid, and the forward limit switch is encountered in the process</td><td>At zero, the forward runs at high speed, encounters the forward limit signal before the origin switch, and the reverse runs at high speed. After the rising edge of the origin switch signal, the reverse runs at low speed, and the first Z signal after the origin switch signal drops</td></tr>
</table></td></tr>
<tr><td>Way 8</td><td colspan="2">Action description</td></tr>
</table>

<table>
<tr><td></td><td>Note: Different initial conditions, different movements
<table>
<tr><th>initial condition</th><th>Back to zero action</th></tr>
<tr><td>8.1-The deceleration point at zero time is invalid, and no positive limit switch is encountered in the process</td><td>At zero, running at high speed, after the rise of the origin switch signal, running at low speed, after the decline of the origin switch signal is encountered, running at low speed, and the first Z signal after the rise of the origin switch signal is stopped</td></tr>
<tr><td>8.2-Effective deceleration point back to zero time</td><td>Start back to zero, the reverse low speed operation, after the origin switch signal down edge, the forward low speed operation, the first Z believe signal after the origin switch signal up edge shutdown</td></tr>
<tr><td>8.3-The deceleration point at zero time is invalid, and the forward limit switch is encountered in the process</td><td>Start back to zero, forward high speed operation, before the positive limit signal, reverse high speed, encountered the origin switch signal up the edge, reverse low speed, after the origin switch signal down along, forward low speed, encounter the origin switch signal up along the first Z believe shutdown</td></tr>
</table></td></tr>
<tr><td rowspan="2">Way 9</td><td>Action description</td></tr>
<tr><td>Note: Different initial conditions, different movements
<table>
<tr><th>initial condition</th><th>Back to zero action</th></tr>
<tr><td>9.1-The deceleration point at zero time is invalid, and no positive limit switch is encountered in the process</td><td>At zero, it is running at high speed. After the rising edge of the origin switch signal, it runs at low speed. After the falling edge of the origin switch signal is encountered, it runs at low speed, and the first Z signal after the rising edge of the origin switch signal is stopped</td></tr>
<tr><td>9.2-Effective deceleration point back to zero time</td><td>Back to zero, the forward low speed operation, after the origin switch signal down edge, the reverse low speed operation, and the first Z after the origin switch signal rising edge shutdown</td></tr>
<tr><td>9.3-The deceleration point at zero time is invalid, and the forward limit switch is encountered in the process</td><td>Start back to zero, forward high speed operation, before the positive limit signal, reverse high speed, encountered the origin switch signal up the edge, forward low speed, the origin switch signal down along, reverse low speed, the origin switch signal up along the first Z signal shutdown</td></tr>
</table></td></tr>
<tr><td rowspan="2">Way 10</td><td>Action description</td></tr>
<tr><td>Note: Different initial conditions, different movements
<table>
<tr><th>initial condition</th><th>Back to zero action</th></tr>
<tr><td>10.1-The deceleration point at zero return is invalid, and no positive limit switch is encountered in the process</td><td>Back to zero, it runs at high speed. After the upward edge of the origin switch signal, it runs at low speed. After the downward edge of the origin switch signal is encountered, it continues to run at low speed, and the first Z signal after the origin switch signal is dropped</td></tr>
<tr><td>10.2-The deceleration point of back to zero time is valid</td><td>Back to zero, the forward low speed operation, the origin switch signal descent edge, the forward low speed operation, and the first Z signal after the origin switch signal descent edge shutdown</td></tr>
<tr><td>10.3-The deceleration point at zero return time is invalid, and the forward limit switch is encountered in the process</td><td>Start back to zero, positive high speed, before the positive limit signal, reverse high speed, after the origin switch signal up along, running at low speed, meet the origin switch signal down along, continue to run at low speed, meet the origin switch signal down along the first Z believe shutdown</td></tr>
</table></td></tr>
</table>

VI) Method 11-14:

Table 3-82 Origin return mode 11-14

<table>
<tr><td>movement block diagram</td><td colspan="2"> 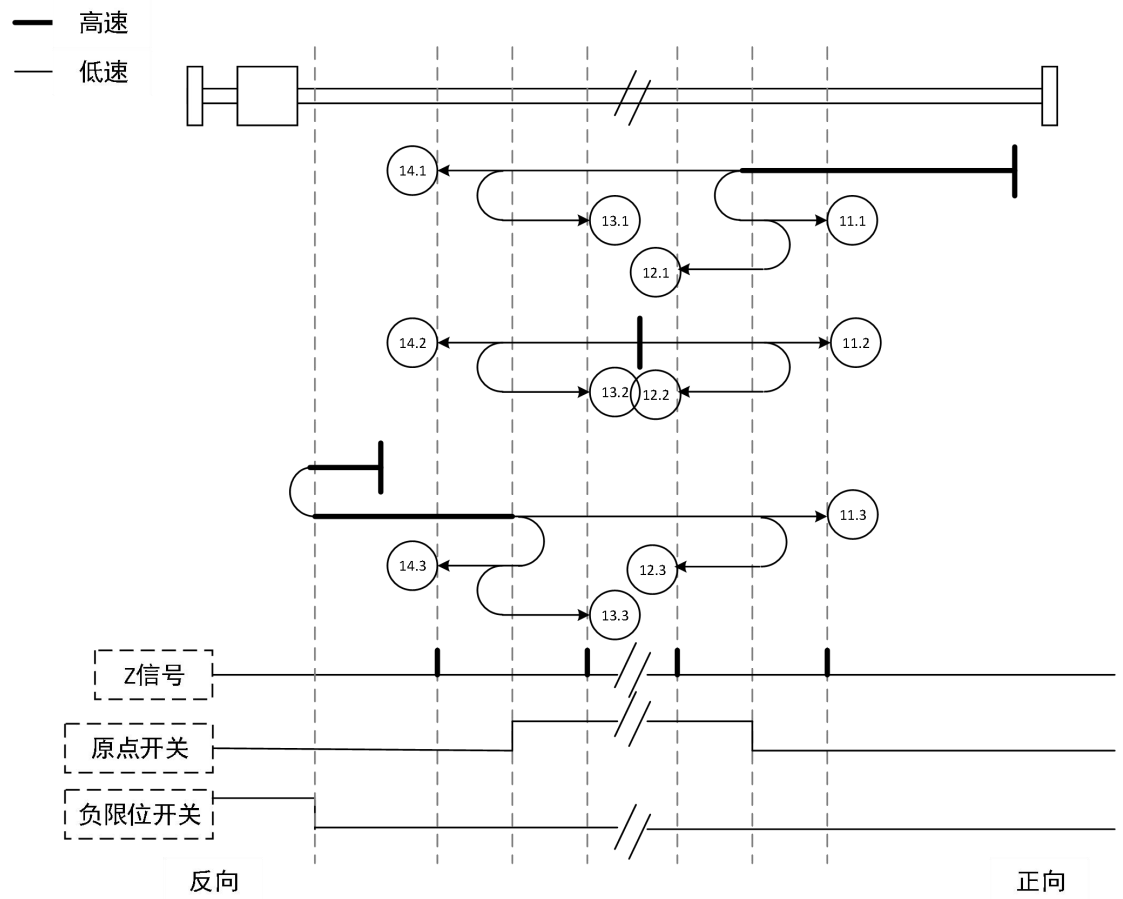
</td></tr>
<tr><td>framing signal</td><td colspan="2"><table>
<tr><td>origin</td><td>Slow down the point</td></tr>
<tr><td>Z believe the number</td><td>Origin switch signal</td></tr>
</table></td></tr>
<tr><td rowspan="2">Way 11</td><td colspan="2">Action description</td></tr>
<tr><td colspan="2">Note: Different initial conditions, different movements
<table>
<tr><td>initial condition</td><td>Back to zero action</td></tr>
<tr><td>11.1-The deceleration point at zero return is invalid, and no positive limit switch is encountered in the process</td><td>Back to zero, the reverse high speed operation, after the origin switch signal rising edge, the forward operation at low speed, and the first Z signal after the origin switch signal falling edge</td></tr>
<tr><td>11.2-The deceleration point of back to zero time is valid</td><td>At the beginning of zero, the first Z signal shutdown after the origin switch signal drops</td></tr>
<tr><td>11.3-The deceleration point at zero time is invalid, and the reverse limit switch is encountered during the process</td><td>Back to zero, reverse runs at high speed, it meets the reverse limit signal before the origin switch, it runs at high speed, after the upwards edge of the origin switch signal, it runs at low speed, and the first Z signal after the descending edge of the origin switch signal stops</td></tr>
</table></td></tr>
<tr><td rowspan="2">Way 12</td><td colspan="2">Action description</td></tr>
<tr><td colspan="2">Note: Different initial conditions, different movements
<table>
<tr><td>initial condition</td><td>Back to zero action</td></tr>
<tr><td>12.1-The deceleration</td><td>Back to zero, the reverse high speed runs. After the rising</td></tr>
</table></td></tr>
</table>

	point at zero return time is invalid, and no reverse limit switch is encountered in the process	edge of the origin switch signal, the reverse runs at low speed. After the falling edge of the origin switch signal, the reverse runs at low speed, and the first Z signal after the origin switch signal stops
	12.2-The deceleration point of back to zero time is valid	Back to zero, the forward low speed, after the origin switch signal falling edge, the reverse low speed, and the first Z signal after the origin switch signal rising edge
	12.3-The deceleration point at zero time is invalid, and the reverse limit switch is encountered during the process	Start back to zero, reverse high speed, before the reverse limit signal, forward high speed, after the origin switch signal up the edge, forward at low speed, after the origin switch signal down along, reverse low speed, after the first Z origin switch signal up down down
Way 13	Action description	
	Note: Different initial conditions, different movements	
	initial condition	Back to zero action
	13.1-The deceleration point at zero return time is invalid, and no reverse limit switch is encountered in the process	Back to zero, reverse running at high speed. After the signal of the origin switch rises, it runs at low speed. After the origin switch signal drops, the signal is running at low speed, and the first Z signal after the origin switch signal rises stops
	13.2-The deceleration point of back to zero time is valid	Start back to zero, the reverse low speed operation, after the origin switch signal down edge, the forward low speed operation, the first Z believe signal after the origin switch signal up edge shutdown
	13.3-The deceleration point at zero time is invalid, and the reverse limit switch is encountered during the process	Start back to zero, reverse high speed, before the reverse limit signal, forward high speed, encounter the origin switch signal up the edge, reverse low speed, meet the origin switch signal down along, forward at low speed, meet the origin switch signal up along the first Z signal shutdown
Way 14	Action description	
	Note: Different initial conditions, different movements	
	initial condition	Back to zero action
	14.1-The deceleration point at zero return time is invalid, and no reverse limit switch is encountered in the process	Back to zero, the reverse runs at high speed, after the rise of the origin switch signal, the reverse runs at low speed, after the origin switch signal drops, the reverse operation continues at low speed, and the first Z signal after the origin switch signal drops
	14.2-The deceleration point of back to zero time is valid	Back to zero, the reverse low speed operation, after the origin switch signal downside, continue the reverse low speed operation, the first Z after the origin switch signal downside
	14.3-The deceleration point at zero time is invalid, and the reverse limit switch is encountered during the process	Start back to zero, reverse high speed, before the reverse limit signal, forward high speed, after the origin switch signal up along, reverse low speed, after the origin switch signal down along, continue to reverse at low speed, meet the origin switch signal down along the first Z believe shutdown

VII) Method 15-16: Retention;

Note that mode 17-30 is similar to mode 1-14, but the difference is not to rely on Z Trust number as the origin, specifically as follows.

VIII) Way 17:

Table 3-83 Origin return mode 17

<table>
<tr><td>movement block diagram</td><td colspan="2"> 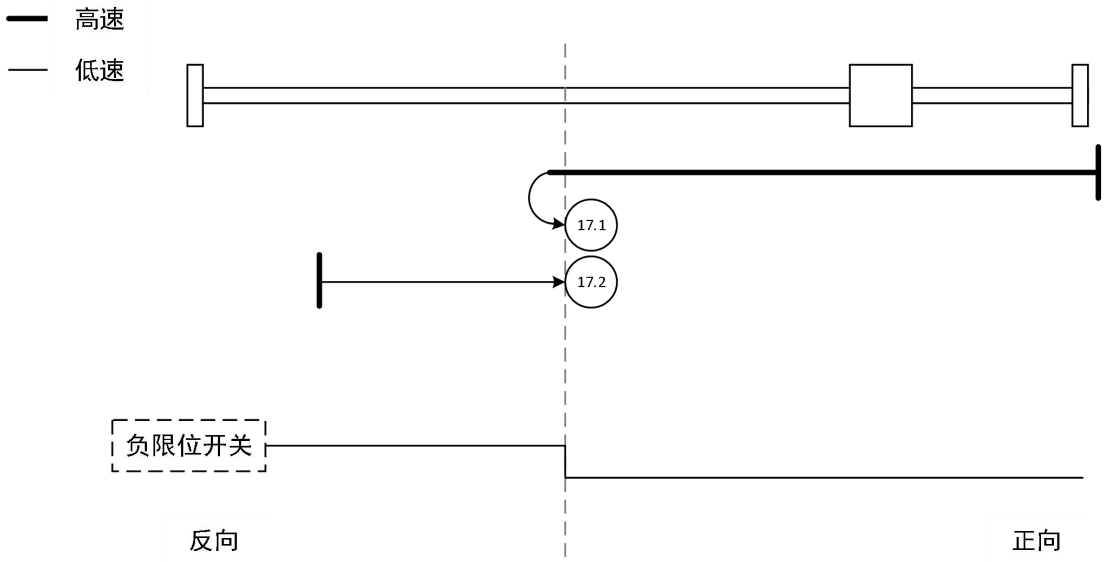
</td></tr>
<tr><td>framing signal</td><td colspan="2"><table>
<tr><td>origin</td><td>Slow down the point</td></tr>
<tr><td>Negative limit switch</td><td>Negative limit switch</td></tr>
</table></td></tr>
<tr><td rowspan="4">Way 17</td><td colspan="2">Action description</td></tr>
<tr><td colspan="2">Note: Different initial conditions, different movements</td></tr>
<tr><td colspan="2"><table>
<tr><td>initial condition</td><td>Back to zero action</td></tr>
<tr><td>17.1-The deceleration point at zero return time is invalid</td><td>Back to zero, the reverse high speed operation, after the reverse limit signal rising edge, the forward low speed operation, and stop after the reverse limit signal falling edge</td></tr>
<tr><td>17.2-The deceleration point of back to zero time is valid</td><td>Start back to zero, and stop after the reverse limit signal drops</td></tr>
</table></td></tr>
</table>

IX) Way 18:

Table 3-84 Origin return mode 18

<table>
<tr><td>movement block diagram</td><td colspan="2"> 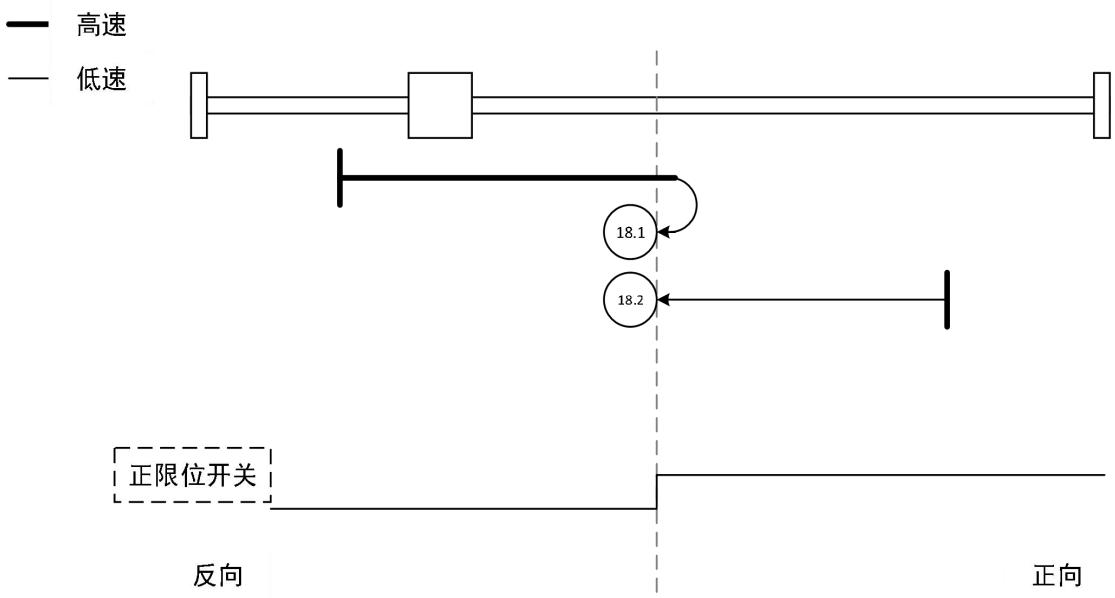
</td></tr>
<tr><td>framing signal</td><td colspan="2"><table>
<tr><td>origin</td><td>Slow down the point</td></tr>
<tr><td>Forward limit switch</td><td>Forward limit switch</td></tr>
</table></td></tr>
<tr><td rowspan="4">Way 18</td><td colspan="2">Action description</td></tr>
<tr><td colspan="2">Note: Different initial conditions, different movements</td></tr>
<tr><td colspan="2"><table>
<tr><td>initial condition</td><td>Back to zero action</td></tr>
<tr><td>18.1-The deceleration point at zero return time is invalid</td><td>At zero, running at high speed, after the positive limit signal rises, running at low speed, and stop after the positive limit signal drops</td></tr>
<tr><td>18.2-The deceleration point of back to zero time is valid</td><td>Start back to zero, start reverse low speed back to zero, and stop after the forward limit signal drops</td></tr>
</table></td></tr>
</table>

X) Method 19-20:

Table 3-85 Origin regression pattern 19 – 20

<table>
<tr><td>movement block diagram</td><td colspan="2"> 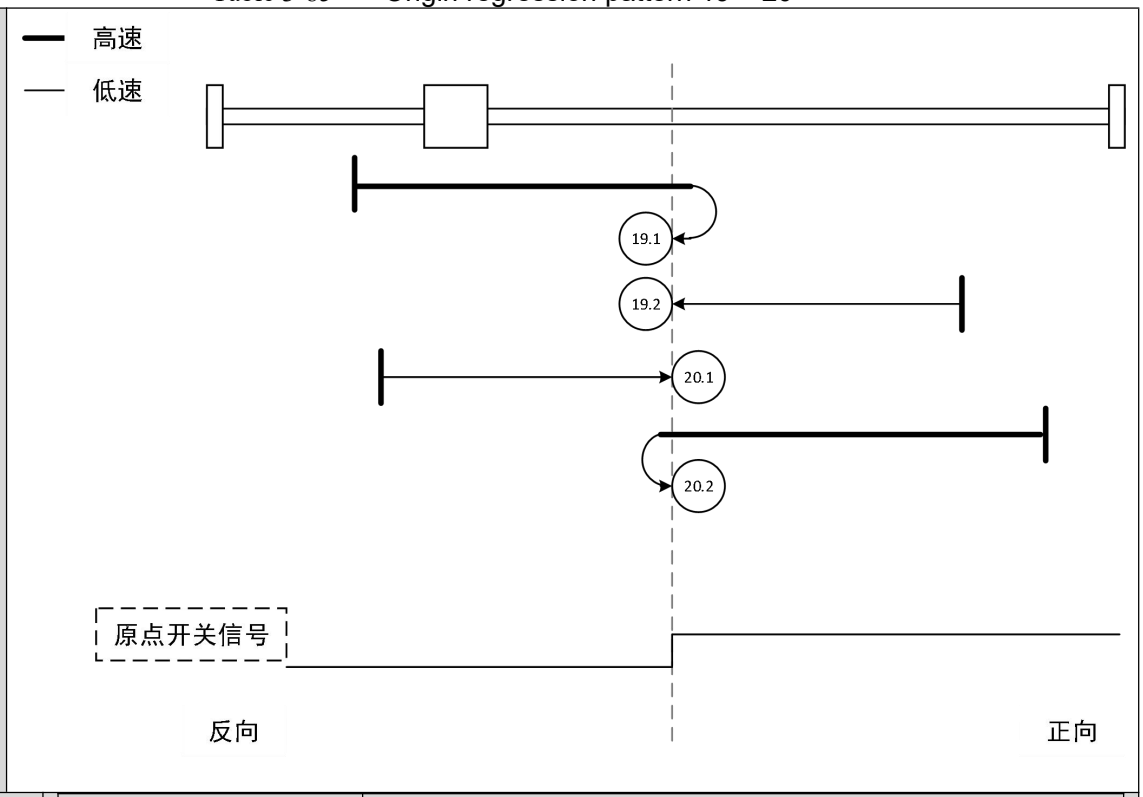
</td></tr>
<tr><td>framing signal</td><td colspan="2"><table>
<tr><th>origin</th><th>Slow down the point</th></tr>
<tr><td>Origin switch signal</td><td>Origin switch signal</td></tr>
</table></td></tr>
<tr><td>Way 19</td><td colspan="2">Action description
Note: Different initial conditions, different movements<table>
<tr><th>initial condition</th><th>Back to zero action</th></tr>
<tr><td>19.1-The deceleration point at zero return time is invalid</td><td>Back to zero, forward high speed, after the origin switch signal rising edge, reverse low speed, and stop after the origin switch signal falling edge</td></tr>
<tr><td>19.2-The deceleration point of back to zero time is valid</td><td>Start back to zero, directly start the reverse low speed back to zero, and stop after the origin switch signal drops</td></tr>
</table></td></tr>
<tr><td>Way 20</td><td colspan="2">Action description
Note: Different initial conditions, different movements<table>
<tr><th>initial condition</th><th>Back to zero action</th></tr>
<tr><td>20.1-The deceleration point at zero return time is invalid</td><td>Start zero, start zero to zero, and stop after the rising edge of the origin switch signal</td></tr>
<tr><td>20.2-The deceleration point of back to zero time is valid</td><td>Back to zero, the reverse high speed operation, after the origin switch signal falling edge, the forward low speed operation, after the origin switch signal rising edge shutdown</td></tr>
</table></td></tr>
</table>

XI) Approach. 21-22:

Table 3-86 Origin return mode 21-22

movement block diagram	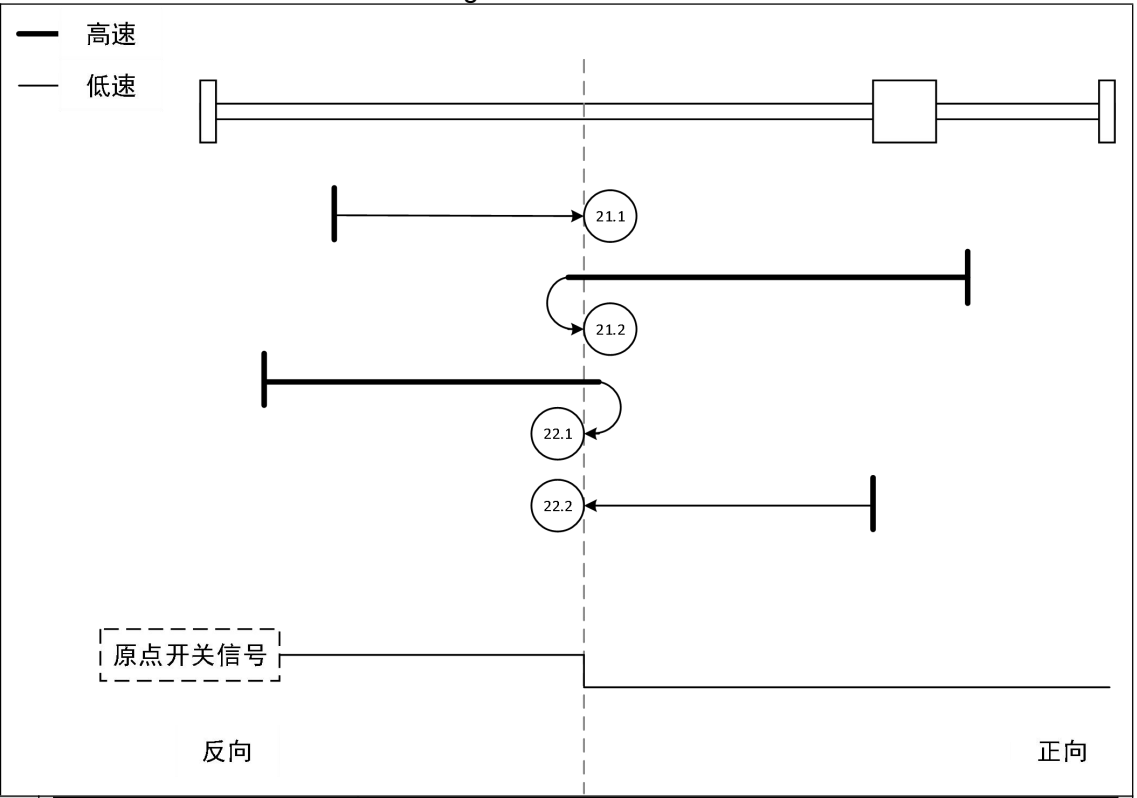
framing signal	origin: Slow down the point Origin switch signal: Origin switch signal
Way 21	Action description Note: Different initial conditions, different movements initial condition: Back to zero action 21.1-The deceleration point of back to zero time is valid: Start back to zero, and stop after the origin switch signal drops 21.2-The deceleration point at zero return time is invalid: Start back to zero, reverse high speed operation, encounter the origin switch signal rising edge, forward low speed operation, encounter the origin switch signal falling edge after shutdown
Way 22	Action description Note: Different initial conditions, different movements initial condition: Back to zero action 22.1-The deceleration point of back to zero time is valid: Back to zero, forward high speed, after the origin switch signal falling edge, reverse low speed, and stop after the origin switch signal rising edge 22.2-The deceleration point at zero return time is invalid: Start back to zero directly start the reverse low speed back to zero, encounter the origin switch signal rise along the shutdown

XII) Approach. 23-26:

Table 3-87 Origin regression mode 23 – 26

<table>
<tr><td>movement block diagram</td><td colspan="2"> 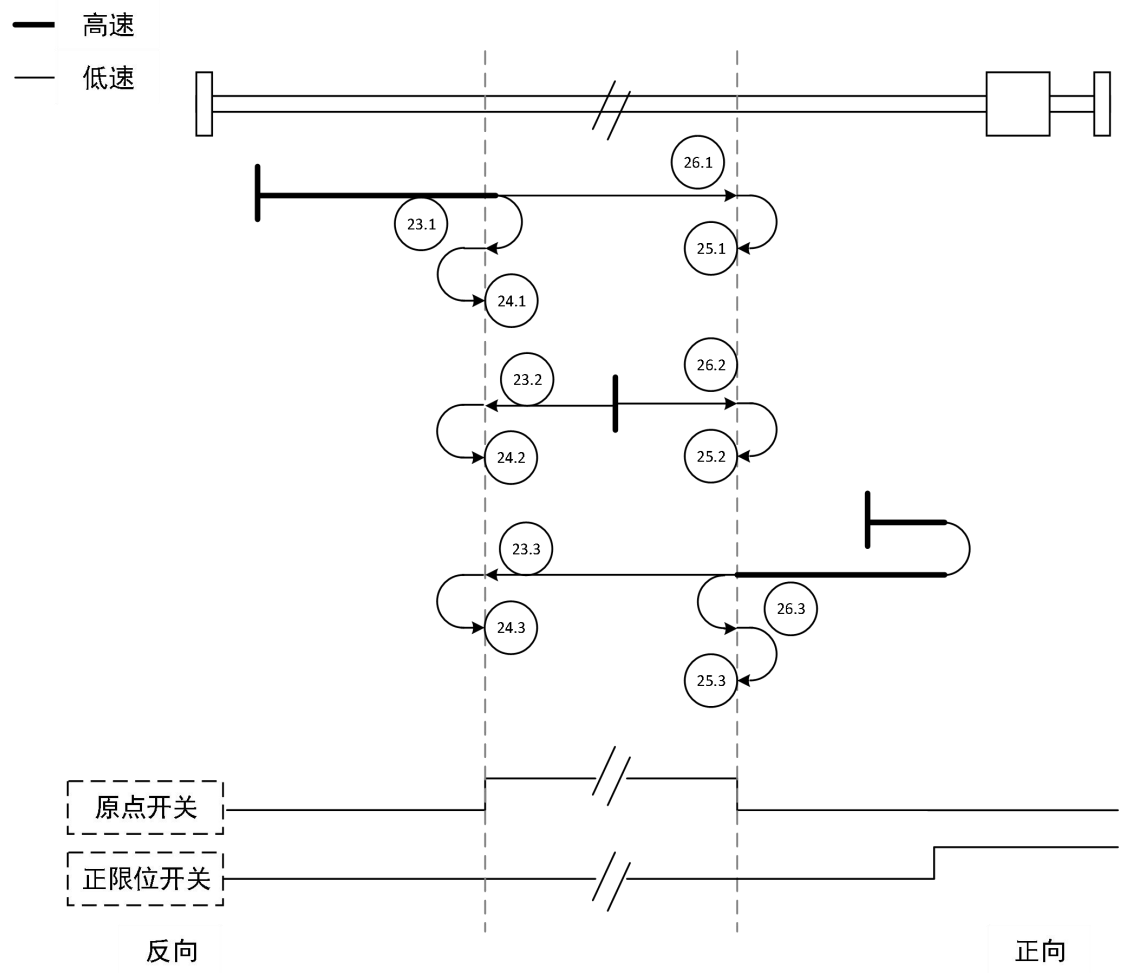
</td></tr>
<tr><td>framing signal</td><td colspan="2"><table>
<tr><td>origin</td><td>Slow down the point</td></tr>
<tr><td>Origin switch signal</td><td>Origin switch signal</td></tr>
</table></td></tr>
<tr><td rowspan="5">Way 23</td><td colspan="2">Action description</td></tr>
<tr><td colspan="2">Note: Different initial conditions, different movements</td></tr>
<tr><td colspan="2"><table>
<tr><td>initial condition</td><td>Back to zero action</td></tr>
<tr><td>23.1-The deceleration point at zero return is invalid, and no positive limit switch is encountered in the process</td><td>Back to zero, forward high speed, after the origin switch signal rising edge, reverse low speed, and stop after the origin switch signal falling edge</td></tr>
<tr><td>23.2-The deceleration point of back to zero time is valid</td><td>Start back to zero, directly start the reverse low speed back to zero, and stop after the origin switch signal drops</td></tr>
<tr><td>23.3-The deceleration point at zero return time is invalid, and the forward limit switch is encountered during the process</td><td>Back to zero, the forward runs at high speed, meets the forward limit signal before the origin switch, and runs at high speed. After the origin switch signal rises edge, the reverse runs at low speed, and then the origin switch signal drops edge</td></tr>
</table></td></tr>
<tr><td>Way 24</td><td colspan="2">Action description</td></tr>
</table>

<table>
<tr><td></td><td>Note: Different initial conditions, different movements
<table>
<tr><th>initial condition</th><th>Back to zero action</th></tr>
<tr><td>24.1-The deceleration point at zero return is invalid, and no positive limit switch is encountered in the process</td><td>Back to zero, forward at high speed, after the origin switch signal rising edge, the reverse low speed, after the origin switch signal falling edge, running at low speed, after the origin switch signal rising edge</td></tr>
<tr><td>24.2-The deceleration point of back to zero time is valid</td><td>Back to zero, the reverse low speed operation, after the origin switch signal down edge, the forward low speed operation, after the origin switch signal rising edge</td></tr>
<tr><td>24.3-The deceleration point at zero return time is invalid, and the forward limit switch is encountered in the process</td><td>At zero, the forward runs at high speed, before the forward limit signal of the origin switch, the reverse runs at high speed, after the origin switch signal up, the reverse runs at low speed, after the origin switch signal down, the forward runs at low speed, after the origin switch signal up</td></tr>
</table></td></tr>
<tr><td rowspan="2">Way 25</td><td>Action description</td></tr>
<tr><td>Note: Different initial conditions, different movements
<table>
<tr><th>initial condition</th><th>Back to zero action</th></tr>
<tr><td>25.1-The deceleration point at zero return is invalid, and no positive limit switch is encountered in the process</td><td>Back to zero, forward high speed, after the origin switch signal rising edge, forward low speed, after the origin switch signal falling edge, the reverse low speed, and stop after the origin switch signal rising edge</td></tr>
<tr><td>25.2-The deceleration point of back to zero time is valid</td><td>Back to zero, running in the forward low speed, after the origin switch signal drops down, the reverse low speed, and stop after the origin switch signal rises up</td></tr>
<tr><td>25.3-The deceleration point at zero return time is invalid, and the forward limit switch is encountered in the process</td><td>Back to zero, the forward running at high speed, before the forward limit signal, the reverse high speed operation, after the origin switch signal rising edge, the forward low speed operation, after the origin switch signal falling edge, the reverse low speed operation, after the origin switch signal rising edge</td></tr>
</table></td></tr>
<tr><td rowspan="2">Way 26</td><td>Action description</td></tr>
<tr><td>Note: Different initial conditions, different movements
<table>
<tr><th>initial condition</th><th>Back to zero action</th></tr>
<tr><td>26.1-The deceleration point at zero return is invalid, and no positive limit switch is encountered in the process</td><td>Back to zero, running at high speed, after the origin switch signal rises edge, then running at low speed, after the origin switch signal drops edge, continue to run at low speed, and stop after the origin switch signal drops edge</td></tr>
<tr><td>26.2-The deceleration point of back to zero time is valid</td><td>Back to zero, running at the forward low speed, after the origin switch signal drops edge, continue to run at the forward low speed, and stop after the origin switch signal drops edge</td></tr>
<tr><td>26.3-The deceleration point at zero return time is invalid, and the forward limit switch is encountered in the process</td><td>Start back to zero, the forward high speed operation, before the forward limit signal, the reverse high speed operation, after the origin switch signal rising edge, the forward low speed, after the origin switch signal down edge, continue to run at the low speed, after the origin switch signal down edge</td></tr>
</table></td></tr>
</table>

XIII) Method 27-30:

Table 3-88 Origin return mode 27 – 30

<table>
<tr><td>movement block diagram</td><td colspan="3"> 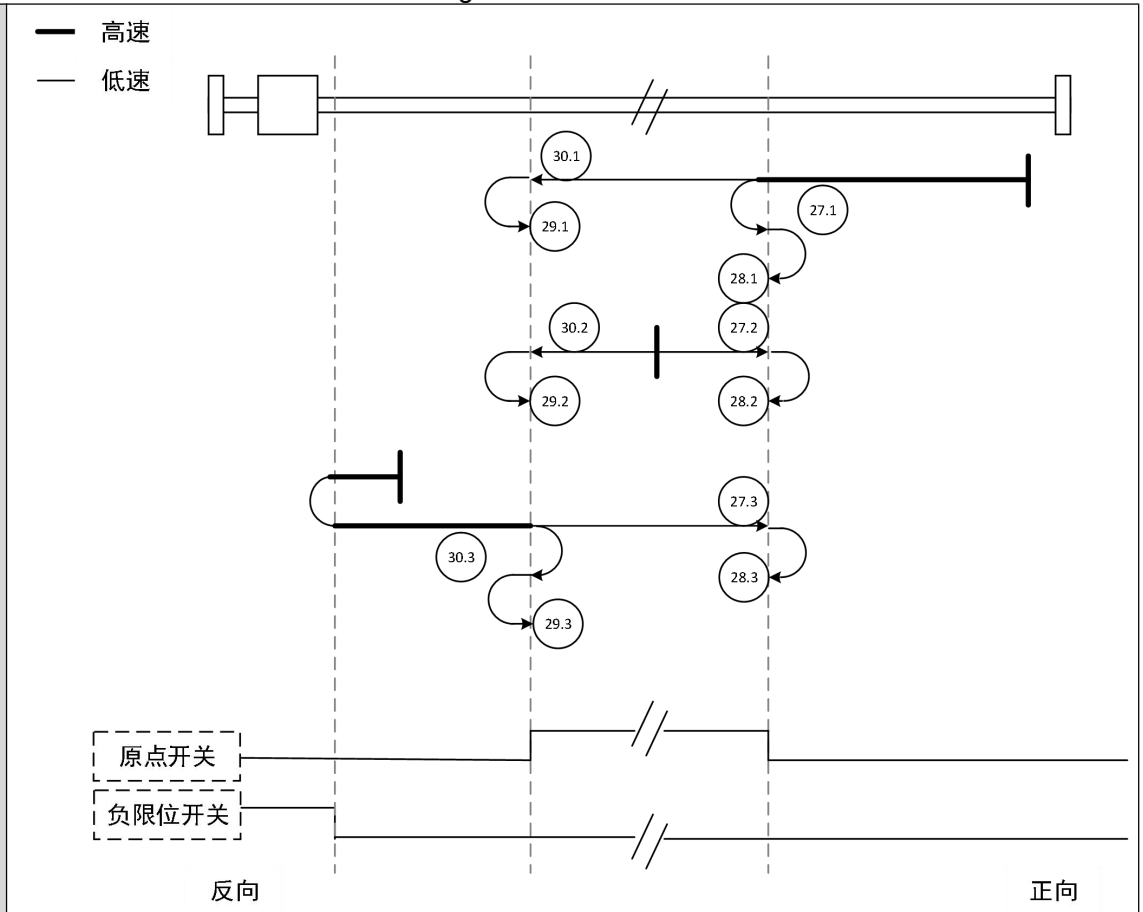
</td></tr>
<tr><td>framing signal</td><td colspan="3"><table>
<tr><th>origin</th><th>Slow down the point</th></tr>
<tr><td>Origin switch signal</td><td>Origin switch signal</td></tr>
</table></td></tr>
<tr><td rowspan="2">Way 27</td><td colspan="3">Action description</td></tr>
<tr><td colspan="3">Note: Different initial conditions, different movements
<table>
<tr><th>initial condition</th><th>Back to zero action</th></tr>
<tr><td>27.1-The deceleration point at zero return is invalid, and no positive limit switch is encountered in the process</td><td>Start back to zero, reverse high speed operation, encounter the origin switch signal rising edge, forward low speed operation, encounter the origin switch signal falling edge after shutdown</td></tr>
<tr><td>27.2-The deceleration point of back to zero time is valid</td><td>Start back to zero, start back to zero, and stop after the origin switch signal drops</td></tr>
<tr><td>27.3-The deceleration point at zero time is invalid, and the reverse limit switch is encountered during the process</td><td>Back to zero, running at high speed, encountering the reverse limit signal before the origin switch, running at high speed, after the origin switch meets the signal rising edge, running at low speed, and stop after the origin switch signal down edge</td></tr>
</table></td></tr>
<tr><td rowspan="2">Way 28</td><td colspan="3">Action description</td></tr>
<tr><td colspan="3">Note: Different initial conditions, different movements
<table>
<tr><th>initial condition</th><th>Back to zero action</th></tr>
<tr><td>28.1-The deceleration</td><td>Start back to zero, reverse high speed operation,</td></tr>
</table></td></tr>
</table>

	point at zero return is invalid, and no reverse limit switch is encountered in the process	encounter the origin switch signal up edge, forward low speed operation, encounter the origin switch signal down edge, reverse low speed operation, encounter the origin switch signal up edge after stop
	28.2-The deceleration point of back to zero time is valid	Back to zero, running in the forward low speed, after the origin switch signal drops down, the reverse low speed, and stop after the origin switch signal rises up
	28.3-The deceleration point at zero time is invalid, and the reverse limit switch is encountered during the process	Back to zero, running at high speed, before the origin switch, running at high speed, after the origin switch signal rises, running at low speed, after the origin switch signal goes down, running at low speed, and stop after the origin switch signal rises
Way 29	Action description	
	Note: Different initial conditions, different movements	
	initial condition	Back to zero action
	29.1-The deceleration point at zero return time is invalid, and no reverse limit switch is encountered in the process	Start back to zero, the reverse high speed operation, after the origin switch signal rising edge, the reverse low speed operation, after the origin switch signal falling edge, the forward low speed operation, after the origin switch signal rising edge shutdown
	29.2-The deceleration point of back to zero time is valid	Back to zero, the reverse low speed operation, after the origin switch signal down edge, the forward low speed operation, after the origin switch signal rising edge
	29.3-The deceleration point at zero time is invalid, and the reverse limit switch is encountered during the process	Start back to zero, reverse high speed operation, before the origin switch before the reverse limit signal, forward high speed operation, after the origin switch signal up edge, reverse low speed operation, after the origin switch signal down edge, forward low speed operation, after the origin switch signal up edge stop
Way 30	Action description	
	Note: Different initial conditions, different movements	
	initial condition	Back to zero action
	30.1-The deceleration point at zero return time is invalid, and no reverse limit switch is encountered in the process	Back to zero time, the reverse high speed operation, after the origin switch signal upedge, the reverse low speed operation, after the origin switch signal downedge, continue the reverse low speed operation, and stop after the origin switch signal downedge
	30.2-The deceleration point of back to zero time is valid	Back to zero, the reverse low speed operation, after the origin switch signal downedge, continue the reverse low speed operation, and stop after the origin switch signal downedge
	30.3-The deceleration point at zero time is invalid, and the reverse limit switch is encountered during the process	Start back to zero, the reverse high speed operation, encounter the origin switch before the reverse limit signal, the forward high speed operation, after the origin switch signal rising edge, the reverse low speed operation, after the origin switch signal down edge, continue to the reverse low speed operation, after the origin switch signal down edge

XIV) Method 31-32: reserved

XV) Approach. 33-34:

Table 3-89 Origin return mode 33-34

movement block diagram	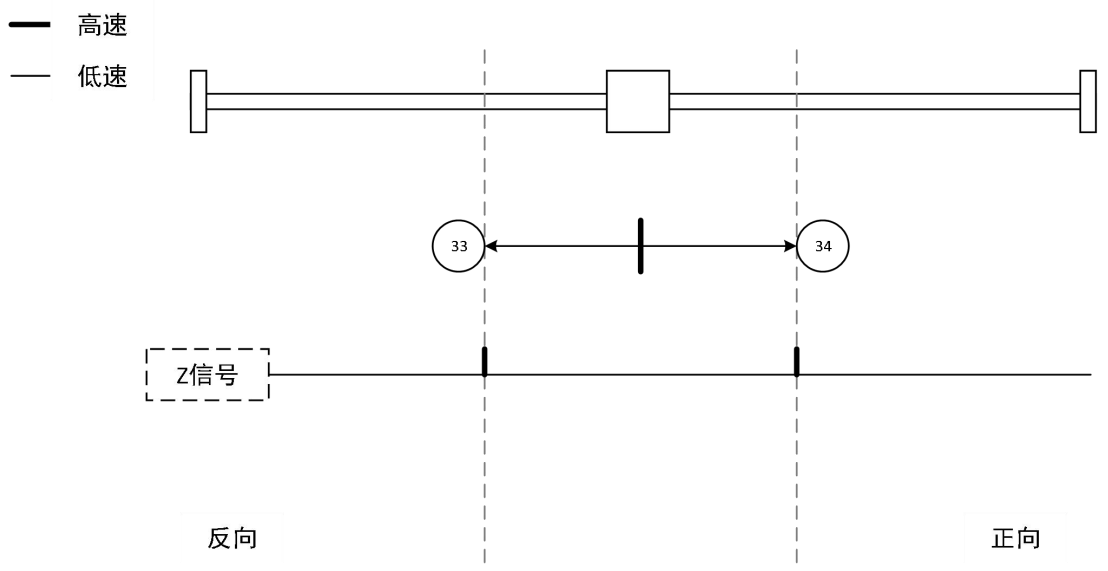	
framing signal	origin	Slow down the point
	Z believe the number	not have
Way 33	Action description	
	33-Reverse low speed operation, encountered the first Z Trust number shutdown	
Way 34	Action description	
	34-Forward low speed operation, encountered the first Z Trust number shutdown	

XVI) Way 35:

Figure 3-53 Origin regression mode 35

movement block diagram	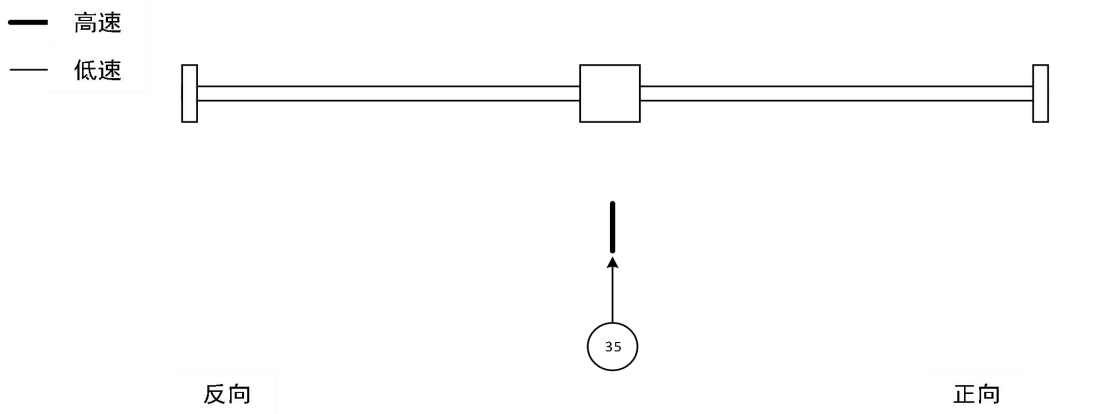	
framing signal	origin	Slow down the point
	current location	not have
Way 35	Action description	
	35-Take the current position as the origin	

XVII) Way-1:

Figure 3-54 Origin return mode-1

<table>
<tr><td>movement block diagram</td><td colspan="2"> 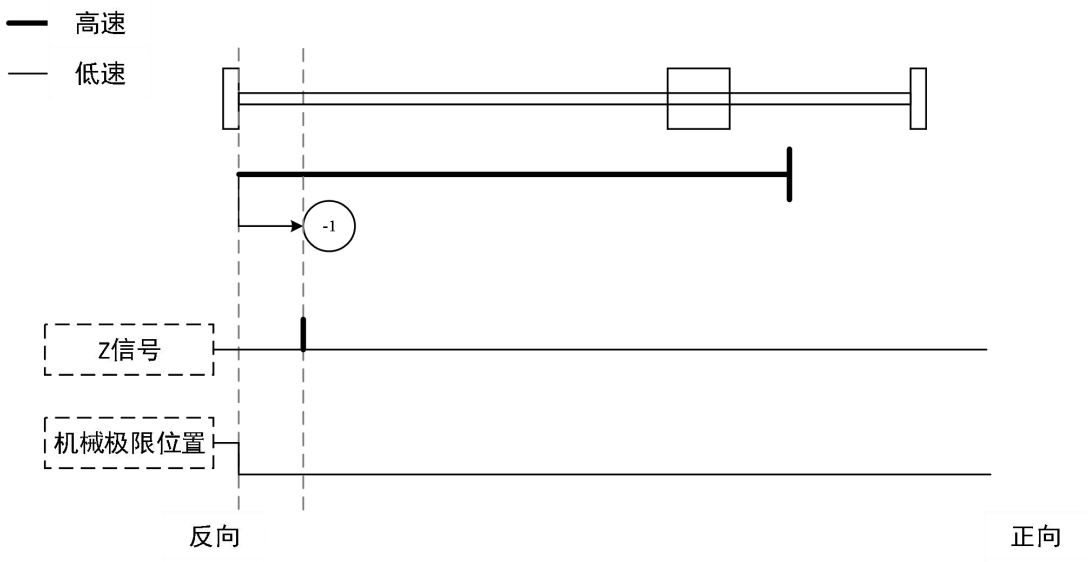
</td></tr>
<tr><td>framing signal</td><td>origin</td><td>Slow down the point</td></tr>
<tr><td></td><td>Z believe the number</td><td>Mechanical limit position</td></tr>
<tr><td rowspan="2">Way-1</td><td colspan="2">Action description</td></tr>
<tr><td colspan="2">-1-The motor first runs at high speed. After hitting the mechanical limit position, if the torque reaches the torque limit value, the speed is near zero speed, and if this state is maintained for a certain time, it is judged that the shaft reaches the mechanical limit position, the motor is running at low speed, and then the first Z Trust shutdown.</td></tr>
</table>

XVIII) Way-2:

Figure 3-55 Origin return mode-2

<table>
<tr><td>movement block diagram</td><td colspan="2"> 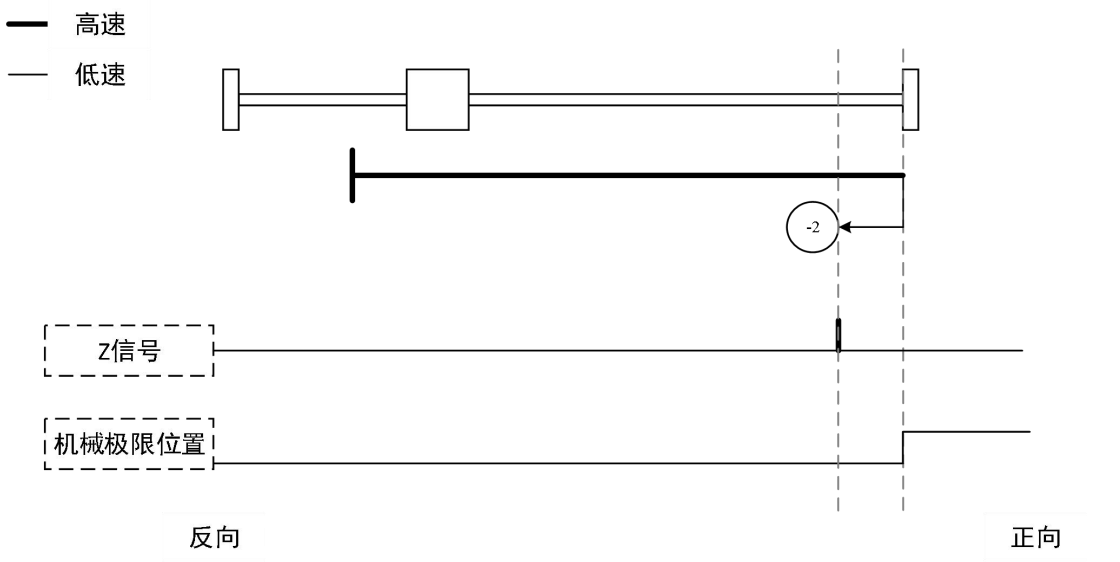
</td></tr>
<tr><td>framing signal</td><td>origin</td><td>Slow down the point</td></tr>
<tr><td></td><td>Z believe the number</td><td>Mechanical limit position</td></tr>
<tr><td rowspan="2">Way-2</td><td colspan="2">Action description</td></tr>
<tr><td colspan="2">-2-The motor is first running at high speed. After hitting the mechanical limit position, if the torque reaches the torque limit value, the speed is near zero speed, and if this state is maintained for a certain time, it is judged to reach the mechanical limit position, the motor runs at low speed, and then the first Z signal stops.</td></tr>
</table>

3.4.4 application function

(1) Probe function

① **Functional overview**

HR3 series servo driver supports servo motor position recording function, which is the probe function, using this function, can lock the motor position (command unit) when the external signal is valid or servo motor Z believe number rising / down edge.

Table 3-90 Probe latch signal selection

order number	Lock the start signal
Probe 1	HDI1
	Z signal
Probe 2	HDI2
	Z signal

pay attention to:

- The latch time can be the rising or falling edge of the external signal, so HR3 can latch four positions simultaneously.
- The HR3 series servo drive supports both a single latch position and a continuous latch.
- If the HDI 1, HDI 2 are used as the trigger signal for the probe function, please turn off the DIDO mandatory function.
- If HDI 1, HDI 2 are used as trigger signals for probe function, assign HDI 1 function 33-probe 1 and HDI 2 function 34-probe 2 as follows:

Table 3-91 HDI 1-HDI 2-related objects

parameter	name	setting
P03.14	HDI 1 terminal function selection	Please set the 33-probe 1
P03.16	HDI 2 terminal function selection	Please set the 34-probe 2

② **Related object (Instruction * setting class)**

Table 3-92 The probe function instruction sets the relevant object

index of matrix	subindex	name	unit	scope	data type	accessibility	PDO
0x2003	0F	The HDI 1 function settings	-	0~34	UINT16	RW	-
0x2003	11	HDI 2 functional settings	-	0~34	UINT16	RW	-
0x60B8	00	Probe function	-	0~65535	UINT16	RW	RPDO

Table 3-94 The 0x60B8 probe function

0x60B8-Probe function	
Index-sub-index	0x60B8-00
data type	UINT16
accessibility	Readable / scripted
unit	-
Windows default	0
least value	0
crest value	65535
Set and effective mode	Operation setting / shutdown takes effect
Related mode	ALL
explanatory note	

Bit	name	description
0	Probe 1 function	0-Not enabled; 1-enabled
1	Probe 1 mode	0-single record; 1-Continuous record
2	Probe 1 triggers the signal	0-HDI 1; 1-Z signal
3	NA	continue to have
4	Probe 1 goes up along the action *	0-No latch; 1-Latch
5	Probe 1 goes down along the action *	0-No latch; 1-Latch
6	NA	continue to have
7	NA	continue to have
8	Probe 2 function	0-Not enabled; 1-enabled
9	Probe 2 mode	0-single record; 1-Continuous record
10	Probe 2 triggers the signal	0-HDI 2; 1-Z signal
11	NA	continue to have
12	Probe 2 rising along the action *	0-No latch; 1-Latch
13	Probe 2 goes down along the action *	0-No latch; 1-Latch
14	NA	continue to have
15	NA	continue to have

pay attention to:

- Please set the trigger mode, trigger signal, rise edge action, and drop edge action before the probe function is enabled.

③ Related Objects (Status * Monitoring Class)

Table 3-95 Probe function status monitoring object

index of matrix	subindex	name	unit	scope	data type	accessibility	PDO
0x60B9	00	Probe state	-	-	UINT16	RO	TPDO
0x60BA	00	Probe 1 rises along the latch position	Directive unit	-	INT32	RO	TPDO
0x60BB	00	Probe 1 drops along the latch position	Directive unit	-	INT32	RO	TPDO
0x60BC	00	Probe 2 rises along the latch position	Directive unit	-	INT32	RO	TPDO
0x60BD	00	Probe 2 drops along the latch position	Directive unit	-	INT32	RO	TPDO

Table 3-96 The 0x60B9 probe status word

0x60B9-Probe Status Word	
Index-sub-index	0x00
data type	UINT16
accessibility	readable
unit	-
Windows default	0
least value	0
crest value	65535
Set and effective mode	-
Related mode	PST
explanatory note	

Bit	name	description
0	Probe 1 function	0-Not enabled; 1-Enabled
1	Probe 1 rises along the latch state	0-rise edge unlatched, 1-rise edge latched
2	Probe 1 drops along the latch state	0-Down edge unlatched, 1-drop edge latched
3-7	NA	continue to have
8	Probe 2 function	0-Not enabled; 1-Enabled
9	Probe 2 rises along the latch state	0-rise edge unlatched, 1-rise edge latched
10	Probe 2 drops along the latch state	0-Down edge unlatched, 1-drop edge latched
11-15	NA	continue to have

④ Probe use

单次上升沿锁存

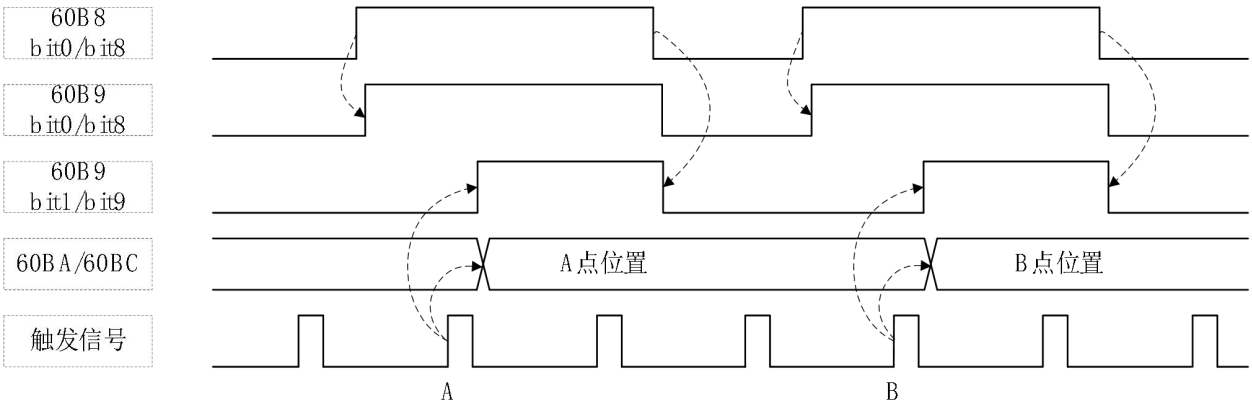

Figure 3-56 Schematic diagram of a single ascending edge latch

单次下降沿锁存

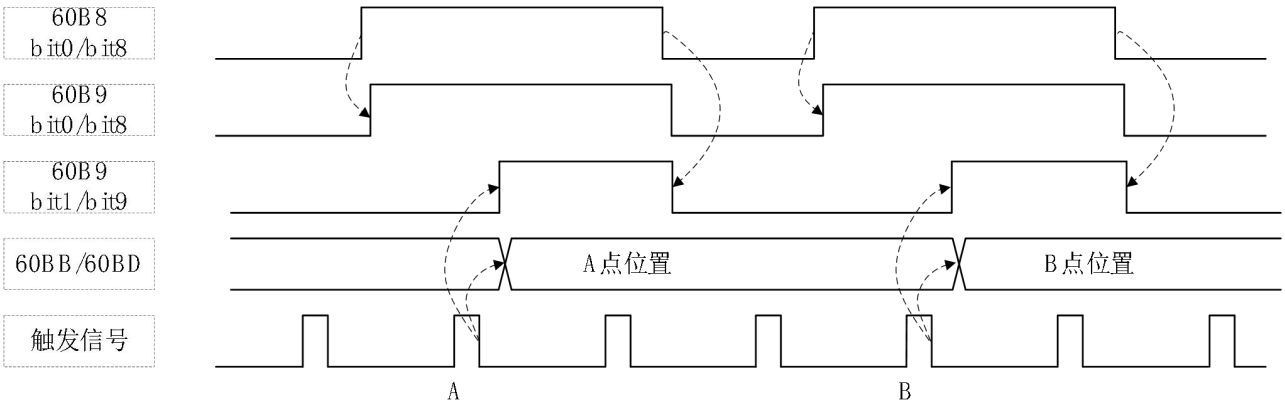

Figure 3-57 Schematic of a single descent along the latch

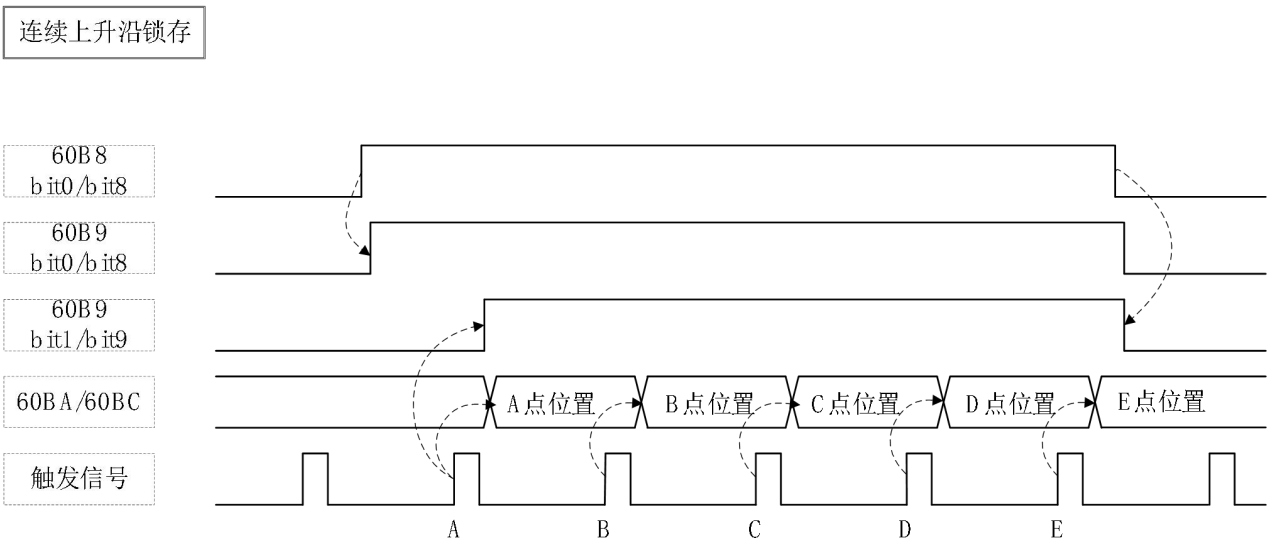

Figure 3-58 Continuously rises along the latch

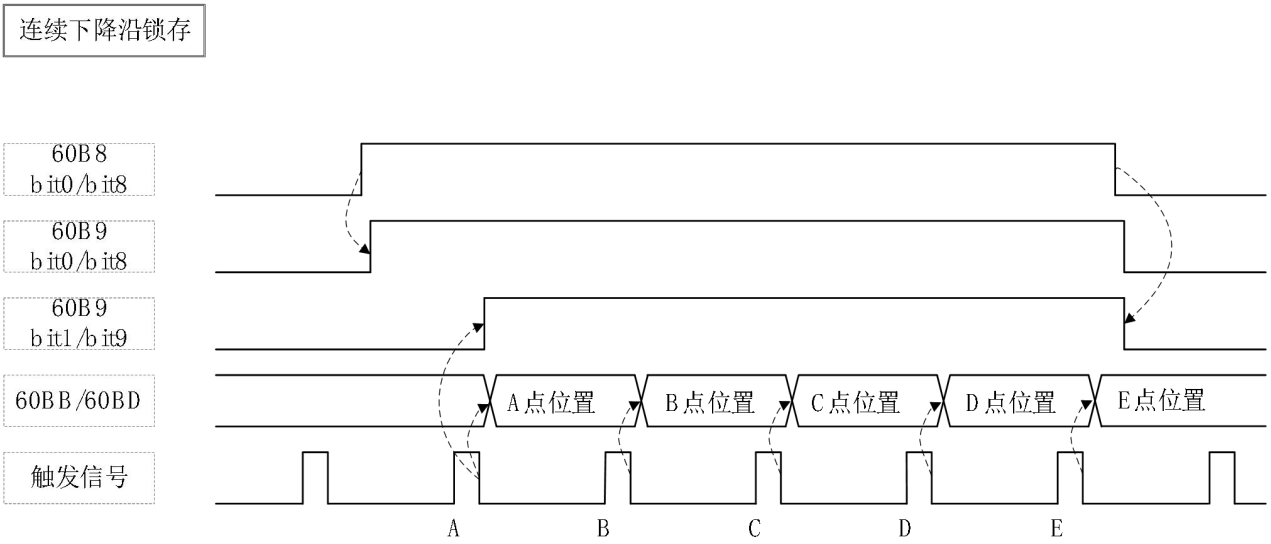

Figure 3-59 Continuous descending along the latch

(2) Soft limit function

① Functional overview

Software limit refers to the function of limiting the position of the servo motor inside the drive to achieve the purpose of protecting the device.

- The software limit function can be used in any mode, and different extended outage modes can be set according to the actual connection mode of the device. If it is the position mode and the target position is outside the limit range, the servo motor moves the endpoint value of the limit range as the destination. If it is the other mode, it will stop the machine in the specified way when the position feedback is outside the limit range.
- The software limit function is to limit the value of 6064h (instruction unit) in a certain range, pay attention to the unit.

- Please ensure that the lower limit of the limit interval is less than the upper limit.
- When the DI override switch is valid and the software limit is valid, the override state is determined by the external DI override switch.

② **Related object (Instruction * setting class)**

Table 3-97 P05.43 Soft limit limit setting

P05.43-Soft limit bit limit setting	
Index-sub-index	0x2005-2C
data type	UINT16
accessibility	Readable / scripted
unit	-
Windows default	0
least value	0
crest value	2
Set and effective mode	Operation setting / shutdown takes effect
Related mode	ALL
explanatory note	Set the opening mode of the software limit function

set value	Software limit function
0	No soft limit function is enabled
1	Open the software restriction function
2	After the origin return, open the software limit function

Table 3-98 0x607D Software Absolute position limit

0x607D-Software absolute position limit		
Index-sub-index	1h	2h
data type	UINT32	
accessibility	RW	RW
unit	-	-
Windows default	-2^{31}	2^{31-1}
least value	-2^{31}	-2^{31}
crest value	2^{31-1}	2^{31-1}
Set and effective mode	Operation setting / shutdown takes effect	
Related mode	ALL	
explanatory note	607D-01h: Minimum position limit 607D-02h: the maximum position limit	

4 gain adjustment

4.1 purpose

In order to make the servo system quickly and accurately track the instructions from the upper computer or the internal setting, give full play to the mechanical performance, and improve the production beat and efficiency, the servo control loop gain needs to be adjusted reasonably.

Take the common wire rod load as an example, e. ggraph 4-1As shown, the trajectory tracking effect can be greatly improved by reasonably improving the speed loop and position loop related gains, ensuring gain matching and matching the speed feedforward function.

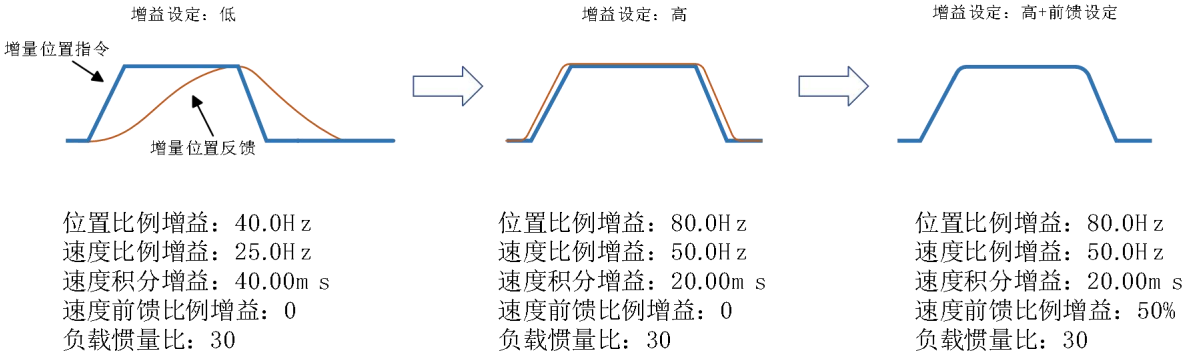

Figure 4-1 Example of gain setting

The servo loop basic gain parameters include, the position ring proportional coefficient

$K_{And\ p,\ the\ velocity\ ring\ gain\ coefficient}K_{And\ v,\ the\ velocity\ loop\ integration\ coefficient}K_{I,\ Torque\ low-pass\ filtering\ coefficient}\tau_{M,\ load\ moment\ of\ ine}$

Before the gain adjustment, the trial operation in Chapter 3 must be performed to confirm that the motor can operate normally without interference!

4.2 The whole way

The HR3 series servo provides three gain adjustment modes, namely "automatic gain adjustment", "manual gain adjustment" and "gain automatic switch" three modes.among,

- "Automatic gain adjustment" mode requires only set one parameter of P1A group- "Response Level setting" to set multiple internal gain parameters and realize the desired response action. The higher the response level, the faster the response; see for detailed introductionSection 4.2.4 Automatic Gain Adjustment。
- "Manual gain adjustment" requires the user to turn off the automatic gain adjustment mode P1A group- "real-time self-adjustment setting" is set to "0-off", P06 group gain parameters are set in turn, including speed ring and position ring gain parameters, from inner ring to outer ring, respectively adjusted to achieve the desired response performance;
- "Gain automatic switch" needs to turn off automatic gain adjustment mode P1A group- "real-time self-adjustment setting" set to "0-off", open gain switch function parameters, P06 group- "Gain Switching-Mode selection" set to 1, P06 group- "Gain Switch-condition selection" set to "10-have position command + actual speed"

The above three gain adjustment methods, in order to achieve good tracking effect, the premise is to implement the rigorous "mechanical load identification" program. HR3 series servo has built-in mechanical load identification algorithm, which can automatically identify the mechanical load through positive and negative operation. The following introduces the mechanical load identification, manual gain adjustment, automatic gain adjustment and gain switching.

4.2.1 Mechanical load recognition

For servo system, mechanical load is the controlled object of the system and is an important part; mechanical load identification includes load inertia, friction and load mechanical resonance point. By automatically identifying the key mechanical characteristics, the servo automatically sets the control loop parameters and compensation parameters reasonably, which can realize the dynamic response performance to meet the application requirements, and greatly reduce the parameter adjustment pressure of the field debugging personnel.

Usually, we do not pay much attention to the absolute value of mechanical load inertia, but pay more attention to the relative size of load inertia and motor inertia, so we generally appear in the control loop in the form of "inertia ratio".

"Load inertia ratio" means:

$$\text{Load inertia ratio} = \frac{\text{Mechanical load inertia}}{\text{Motor rotor inertia}}$$

Load inertia ratio is an important parameter of servo system. Setting load inertia ratio correctly helps to complete debugging quickly.

The servo drive has a built-in load inertia identification function, which can realize the automatic identification of load inertia by executing the algorithm.

Automatic identification method of inertia identification:

By operating the keys on the servo drive panel to make the motor move, realize the inertia identification, without the intervention of the upper machine;

⚠ pay attention to:

It is possible that normal mechanical load identification may not be possible, where manual gain adjustment is required.

Table 4-1 Factors influencing the mechanical load identification

	Factors that influence the mechanical load identification
Load inertia	■ Ininertia mismatch, load inertia ratio greater than 100 times ■ Load inertia is unstable, time-varying or slowly changing
mechanical properties	■ Mechanical rigidity is very low, for example, the belt drive mechanism, the belt is not tightened ■ Nonlinear factors such as excessive engagement tooth gap or excessive positive and reversal operation back gap during operation, such as gear transmission mechanism and different gear installation conditions
Exercise conditions	■ The movement speed was less than 150rpm ■ When the acceleration and deceleration torque is less than the partial load torque or less than the viscous friction torque ■ Acceleration is less than 3000 rp m/s

If the actual load inertia ratio is large, resulting in slow motor movement, increase P1A group- "Response Level setting" and resume inertia identification.

If vibration occurs during the identification process, the inertia identification should be stopped immediately to reduce the P1A group- "Response Level setting".

Before conducting offline inertia identification, first confirm the following contents:

- There is more than one loop between the mechanical limit switches:
- Before offline inertia identification, make sure that the limit switch is installed on the machine to prevent accidents!

If the actual load inertia ratio is large, it is estimated to be more than 30 times larger than the motor inertia, inertia mismatch, resulting in slow motor movement, the following two measures can be taken:

- The preset load inertia ratio is a large initial value, and it is recommended to take 5.00 times as the starting value until the identification is updated; the load inertia ratio can be set "2006-0 Bh" by the object word, "P06.10" through the panel, and "P06 group-load inertia ratio" through the background software
- The drive "P1A Advanced Adjustment-Response Level setting" is increased appropriately in the background, or set through the object word "201A-02h".

The inertia identification adopts the form of positive and reverse triangular wave motion. The program has defaults to the optimal motion parameters. Users can adjust the motion parameters according to the actual application scenario. The motion curve and the parameters are set as follows.

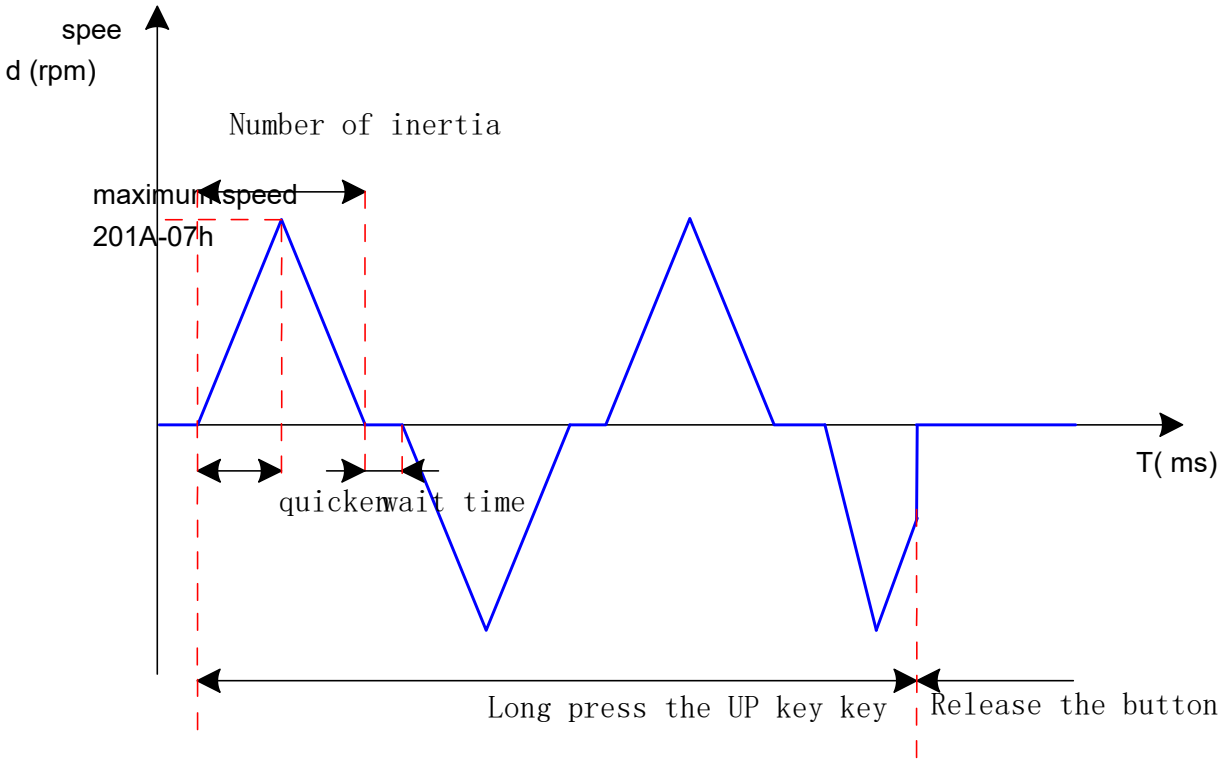

Figure 4-2 Ininertia recognition motion graph

Table 4-2 Self-set parameter index code:

0x201A-Advanced Adjustment				
subindex	0x07-Ined maximum speed	0x08-Ined acceleration time	0x09-InIned waiting time	0x0A-Ined number of rotational turns
data type	UINT16			
accessibility	Readable / scripted	Readable / scripted	Readable / scripted	read only
unit	rpm	ms	ms	shut in a pen
Windows default	500	125	800	1.00
least value	100	20	50	0 .00
crest value	1000	800	10000	655.35
setting, Effective mode	Downtime setting / immediate immediately	Downtime setting / immediate immediately	Downtime setting / immediate immediately	--
Related mode	PST			
explanatory note	Offline inertia identification related parameter setting, the internal default best value, generally, no setting			

4.2.2 Manual gain adjustment

(1) Basic gain parameters

In the extreme performance requirement scenarios, the gains can be manually fine-tuned. Through more detailed adjustment, optimize the debugging effect.

The servo system is composed of three control loops, namely the current loop, speed loop and position loop.

The more medial to the loop, the higher the requirement of responsiveness. Generally, the bandwidth of the inner ring should be set to more than 4 times the bandwidth of the outer ring. For example, the current ring should be 2000Hz, the bandwidth of the speed ring should not be higher than 500Hz, and the bandwidth of the position ring should not be higher than 125Hz. During the debugging process, this principle should be observed as much as possible, otherwise it may lead to system instability!

The default current ring gain of the servo driver ensures responsiveness, generally no adjustment, only position loop gain, speed loop gain and other auxiliary gains. Therefore, when making the gain adjustment in the position control mode, if the position is to improve the response performance, in order to ensure the stability of the system, the speed ring gain is first increased, and ensure that the inner ring between the rings is 4 times higher than the bandwidth of the outer ring, and then the position ring gain is increased to reduce the position tracking error. Loop gain adjustment must be ensured from the inside out.

The basic gain parameters were adjusted as follows.

Table 4-3 Adjustment instructions of the loop gain parameters

step	Index code	name	Adjust the instructions
1	2006-01h	The velocity proportional gain of 1	Parameter action: The highest frequency determines the change that the speed ring can follow. If the load inertia ratio average (2006-0 Bh) is set correctly, it may be considered that: Highest follow frequency of the speed loop =2006-01h 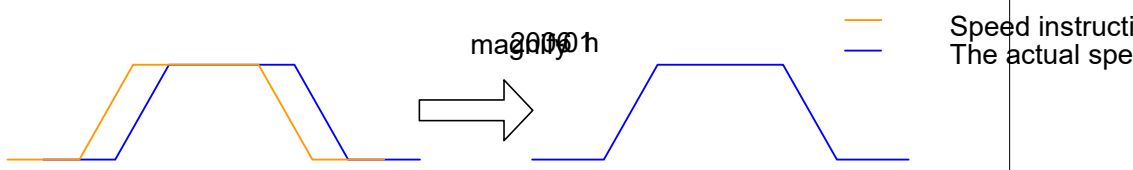 regulation means: In the case of no noise and vibration, increasing this parameter can speed up the positioning time, bring better speed stability and following; To ate noise, reduce the parameter set value; When mechanical vibration occurs"Section 4.3.2."Use the trap device or the torque low-pass filter function to suppress the vibration.

step	Index code	name	Adjust the instructions
2	2006-02h	The velocity -integral gain of 1	Parameter action: Eliminate the velocity loop deviation. 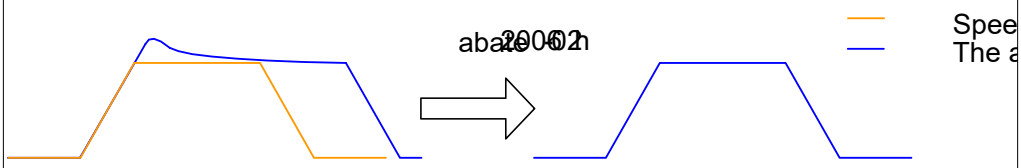 regulation means: It is recommended to take the following relationship values by: 500≤2006-01h×2006-02h≤1000 For example, with the velocity loop gain 2006-01h=40.0Hz, the velocity loop integration time constant should satisfy: 12.50ms≤2006-02h≤25.00ms. Reducing the setting value can strengthen the integration function and speed up the positioning time, but the setting value is easy to cause mechanical vibration. The set value is too high and the speed ring deviation cannot be zero. When 2006-02h=512.00ms, the integral is invalid.
3	2006-03h	Position -scale gain of 1	Parameter action: The highest frequency of the position ring can follow. The highest follow angle frequency of the position loop =2006-03h 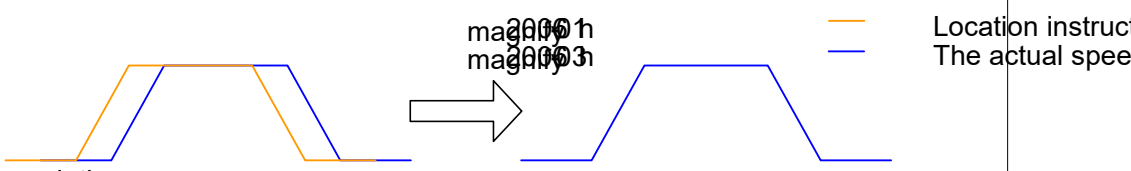 regulation means: To ensure the stability of the system, the highest following frequency of the speed ring is 3~5 times the highest following frequency of the position ring, so: $$3 \le \frac{2 \times \pi \times 2006-01h}{2006-03h} \le 5$$ For example, with the velocity loop gain 2006-01h=40.0Hz, the position loop gain should satisfy: 50.2Hz≤2006-03h≤83.7Hz. Adjust according to the location time. Increasing this parameter can accelerate the positioning time and improve the ability of the motor to resist external ;turbances when stationary. ıigh set point may lead to system instability and oscillation.
4	2007-03h	Recurre nt filter 1	Parameter action: Eliminate the high-frequency noise and suppress the mechanical resonance. 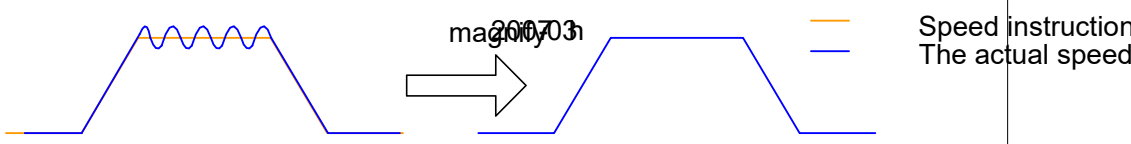 regulation means: The cut-off frequency of the torque command low-pass filter shall be 4 times higher than the maximum following frequency of the speed ring, thus: $$\frac{1000}{2 \times \pi \times 2007-03h} \ge (2006-01h) \times 4$$ For example, when the speed ring gain 2006-01h=40.0Hz, the torque command

step	Index code	name	Adjust the instructions
			filtering time constant should meet: 2007-03h≤1.00ms. When the vibration occurs when increased 2006-01h, the vibration can be suppressed by adjusting 2007-03h. Please refer to the specific setting"4.3.2 Vibration suppression-Low-pass filter"; The set value is too large, and the response of the current ring will decrease; To suppress the vibration during shutdown, try to increase 2006-01h and reduce 2007-03h; If the motor stop state vibration is too high, try to reduce the set value of 2007-03h.

Position loop gain

$K_{And\ p,\ the\ velocity\ loop\ gain}$ $K_{And\ v,\ the\ velocity\ loop\ integral}$ $T_{I,\ Torque\ low-pass\ filtering\ time}$ $T_{F\ is\ the\ servo-controlled\ basic\ loop\ gain\ parameter.\ A\ c}$

$$K_p \leq \frac{\pi}{2} \cdot K_v$$

$$T_i \geq 4 \cdot \frac{1}{K_v}$$

$$T_f \leq \frac{1}{4} \cdot \frac{1}{K_v}$$

Specific function codes of gain class and torque control parameters are shown in the following table:

Table 4-4 Gain class and the torque control parameter index code

0x2006-Gain class parameter				0x2007-Torque control parameters
subindex	0x01-Speed ratio gain of 1	0x02-Speed-integral gain of 1	0x03-Position proportional gain of 1	0x03-Torque filter for 1
data type	UINT16			
accessibility	Readable / scripted	Readable / scripted	Readable / scripted	Readable / scripted
unit	Hz	ms	Hz	ms
Windows default	25 . 0	31 . 83	40 . 0	0. 79
least value	0. 1	0. 15	0. 1	0.0 0
crest value	2000 . 0	512 . 00	2000 . 0	30 . 00
Set and effective mode	Downtime setting / becomes effective immediately	Downtime setting / becomes effective immediately	Downtime setting / becomes effective immediately	Downtime setting / becomes effective immediately
Related mode	-			
explanatory note	-			

(2) feedforward control

① Speed feed forward

In the position control mode, the theoretical speed instruction required for the action is directly calculated through the internal position command, and added with the speed instruction obtained by the

position feedback closed-loop calculation to the speed regulator instruction input. Compared with the simple feedback control ratio, the position tracking error can be greatly reduced and the response performance can be improved. Therefore, using the speed feedforward function, we can improve the speed instruction response and reduce the position deviation at the fixed speed.

Theoretically, the relationship between position deviation and position ring gain and velocity feedforward gain, as shown below. If the velocity feedforward gain is set to 100%, the position deviation will theoretically become zero, but too large feedforward gain coefficient will cause excessive velocity overshoot in the acceleration and deceleration segment.

When the position command update cycle is less than the servo control cycle, the speed of feedforward differential operation, can cause large differential error, this error into high frequency torque instruction components, and induce electromagnetic noise during operation, please use the position command filter (FIR filter or sliding mean filter), or increase the speed feedforward filter value.

位置偏差[指令单位]=指令速度[指令单位/s]/位置环增益[1/s]
×（100-速度前馈增益[%]）/100

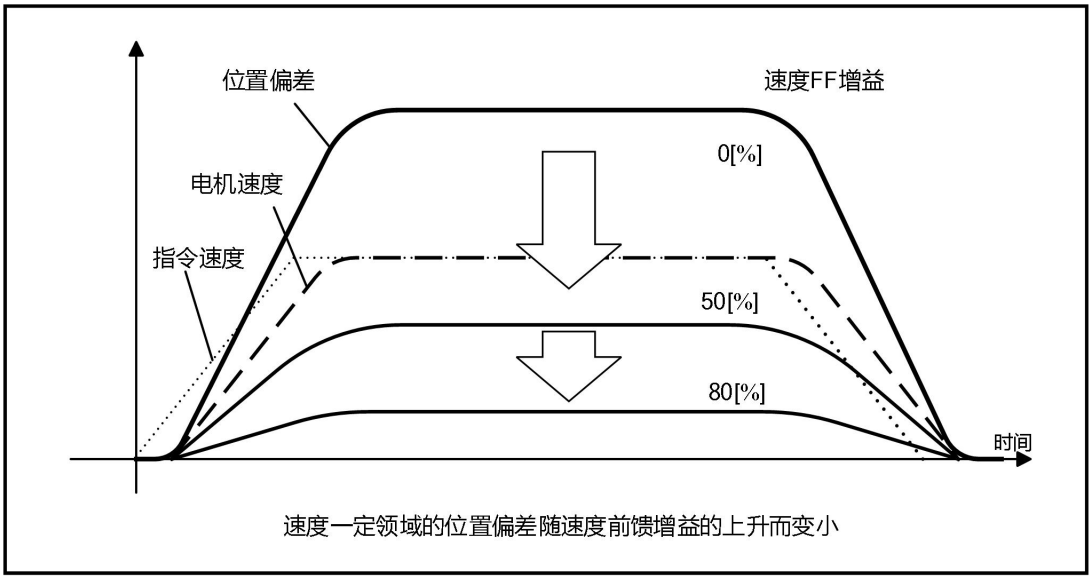

Figure 4-3 Speed feedforward gain and position deviation relationship

Speed feedforward function operation steps:

A） Set the speed feedforward signal source

Put the 2013-0 Dh (speed feedforward control selection) as a non-0 value, the speed feedforward function takes effect, and the speed feedforward signal source can be selected internal and external, as shown in the table below.

Table 4-5 Speed feedforward control with the selection of index codes

Index code	name	set value	remarks
2013-0Dh	Speed feedforward control	0-No speed feedforward	-
		1-Internal speed feedforward	The velocity information corresponding to the position instruction is used as the source of the

	selection		velocity feed-forward signal.
		2-The 60B1h was used as a speed feedforward input	Use the 60B1h speed bias (instruction unit / second) as the source of the speed feedforward signal. The polarity of the velocity feedforward signal can be changed by the bit6 bit of 607 Eh (polarity).

B） Set the speed feedforward parameters

Including speed feedforward gain (2006-09h) and speed feedforward filtering time (2007-07h).

Table 4-6 Speed feedforward parameter index code

Index code	name	Adjust the instructions
2007-07h	Speed-feedforward filtering time	Reduce the filter time, can inhibit the acceleration of deceleration speed over-punching; Increasing the filtering time can suppress the noise when the update cycle of the position command is longer than the drive control cycle, and the pulse frequency of the position command is not uniform, and suppress the jitter of the positioning completed signal;
2006-09h	Speed-feedforward proportional gain	Seegraph 4-13

② **Torque feedforward**

The position control mode, using torque feed-forward, can improve the dynamic speed response and reduce the position deviation during fixed acceleration and deceleration; using torque feed-forward, set the correct load torque inertia ratio, please use the chapter4.2.1Mechanical load identification results in the section. The torque feed forward gain is set to the non-zero value, and the torque feed forward function is enabled. By improving the torque feed forward gain, the position deviation in the constant acceleration and deceleration process can be controlled to near 0, and in the absence of external torque interference, the trapezoidal motion curve can be perfectly tracked.

Operation steps of the torque feed-forward function:

A） Set the torque feedforward signal source

The 2014-0 Ch (torque feedforward control selection) is set as a non-zero value, the torque feedforward function takes effect, and the feedforward signal source can be selected internal and external, as shown in the table below.

Table 4-7 Speed feedforward control selection parameter index code

Index code	**name**	**set value**	**remarks**
2014-0Ch	Torque-feedforward control selection	0-No-torque-feedforward	-
		1-Internal torque feed-forward	Use the speed instruction as a source of the torque feedforward signal. In the position control mode, the speed command comes from the output of the position controller.
		2-The 60B2h is used as a torque feed-forward input	Using 60B2h (torque bias, 0.1%) as the source of the torque feedforward signal. The polarity of the torque feedforward signal can be changed by the bit-bit5 of 607 Eh (polarity).

B） Set the torque feedforward parameters

Including the torque feedforward proportional gain (2006-0A) and the torque feedforward filtering

time (2007-08).

Table 4-8 Speed feedforward parameter index code

Index code	name	Adjust the instructions
2006-0 A h	Torque-forward feed-forward proportional gain	Increasing the proportional gain can improve the response, but the acceleration and deceleration may produce overshoot; Reduce the filtering time to suppress the overshooting during acceleration and deceleration; increase the filtering time to suppress the noise; regulation means: When adjusting, first, keep the filtering time as the default value; then, gradually increase the proportional gain set value from zero until the feed-forward torque is effective. During the adjustment, 2006-0 Ah and 2007-08h should be adjusted repeatedly to find a setting with good balance
2007-08h	Torque feed-forward filtering time	

(3) Two degrees of freedom control

In non-torque control mode, the control effect can be improved at 100%, ordinary PI control mode; in non-100% control, it can be used to increase the resistance to external forces and improve the speed response waveform.

The following figure shows the improvement of the two degrees of freedom control coefficient on the slow rise of speed and the slow completion of positioning.

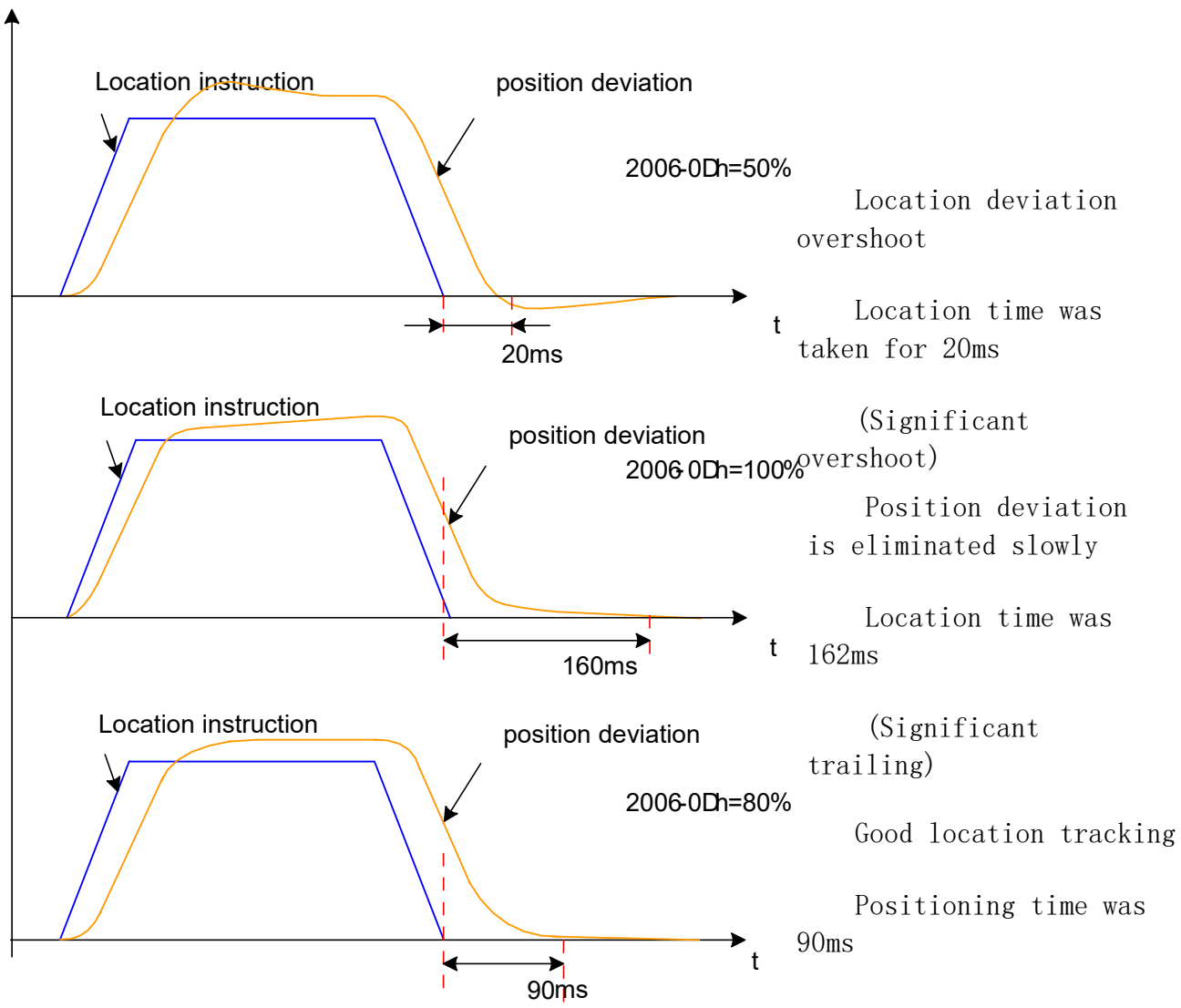

Figure 4-4 Two-degree-of-freedom control for examples

The second degrees of freedom control adjusts the speed ring control method to enhance the anti-interference ability of the speed ring and improve the following of the speed command.

Table 4-9 Two-degrees of freedom feedforward coefficient index code

Index code	name	Adjust the instructions
2006-0Dh	Two degrees of freedom feedforward coefficient	Parameter action: The control method of changing the speed loop in the non-torque control mode. regulation means: 2006-0 Dh setting is too small, the speed ring response is slow; When the speed feedback is overrushed, the 2006-0 Dh is gradually reduced from 100.0, until a set value, the two degrees of freedom control is effective. For 2006-0 Dh = 100.0, the speed loop control method is unchanged, as the default proportional integral control.

4.2.3 Gain switching

The Gain switching function is only valid in position and speed control mode and can be triggered by servo internal state or external DI. With gain switching, the following functions:

- When the motor enables static, the position lock state can switch to the lower gain to suppress vibration and reduce static noise;
- In the process of motor stop, the position integer timing can be switched to a higher gain to shorten the positioning time;
- It can switch to a higher gain in the motor running state to obtain better instruction tracking performance;
- Different gain settings can be switched by external signals according to the load device situation.

give an example:

In the application scenario of LED solid crystal machine, the servo has high speed, high precision and high response demand, which is a typical application of fast positioning P2P. The gain switching function can not only ensure the fast setting requirements, but also reduce the noise when the servo is stationary.

Table 4-10 Speed-gain adjustment step

ara me ter gro up	The Gain Switch adjustment step	Manual gain adjustment without using gain switching		The second gain is set to be the same as the basal gain		Turn on the gain switch function		At rest, the first set of gain parameters was adjusted to eliminate rest noise
06	The velocity proportional gain of 1	35.0 Hz						27.0 Hz
06	The velocity-integral gain of 1	16.00 ms						
06	Position-scale gain of 1	63.0 Hz						
07	Recurrent filter 1	0.65 ms						0.84 ms
06	Speed ratio gain of 2			35.0 Hz				
06	Speed-integral gain of 2			16.00 ms				
06	Position-scale gain of 2			63.0 Hz				
07	Recurrent filter 2			0.65 ms				
06	Gain Switch-mode selection	0				1		
06	Gain Switch-Conditional Selection					10		
06	Load inertia ratio	Obtained by inertia identification						

HR3 series servo supports the following 10 gain switching modes, one of which is external DI switching and 9 are switched according to the internal servo motion state:

0: The first gain is fixed (PS)

1: Switch using an external DI (PS)

2: Torque instruction (PS)

3: Speed instructions (PS)

4: Change rate of the speed instruction (PS)

5: Speed command high and low speed threshold (PS)

6: Position deviation (P)

7: Position command is available (P)

8: Positioning is not complete (P)

9: Actual speed (P)

10: With the position command + the actual speed (P)

Among them, (P) the switching mode only supports position control mode, and (PS) the switching mode supports position control and speed control modes. The following are further switching instructions for the 9 servo internal switching modes.

⚠ pay attention to:

The delay time "2006-12h" is only valid when the second gain is switched to the first gain.

Table 4-11 Gain-class parameter index code

0x2006-Gain class parameter						
subindex	0x10-Gain Switch-mode setting	0x11-Gain switch-condition selection	0x12-Gain switching-time delay	0x13-Gain switch-grade	0x14-Gain switch-time lag	0x15-Gain switch-time
data type	UINT16					
accessibility	Readable / scripted	Readable / scripted	Readable / scripted	read only		read only
unit	-	-	ms	-	-	ms
Windows default	1	0	5 . 0	50	30	3 . 0
least value			0. 0	0	0	0. 0
crest value	0: The first gain is fixed for P / PI switching using an external DI 1: The first gain and the second gain switch effectively, and the switching condition is P06.16	0: First Gain fixed (PS) 1: Switching with an external DI (PS) 2: Torque command is large (PS) 3: Large speed command (PS) 4: Large change rate of speed instruction (PS) 5: Speed command High and Low Speed Threshold (PS) 6: Large position deviation (P) 7: Position command (P) 8: Location is not complete (P) 9: Actual speed (P) 10: Position command + actual speed (P)	1000 . 0	20000	20000	1000 . 0
Set and effective	Run Set / Effective	Run Set / Effective	Downtime setting /	Downtime setting /	Downtime setting /	Downtime setting /

mode	immediately	immediately	becomes effective immediately	becomes effective immediately	becomes effective immediately	becomes effective immediately
Related mode	-					
explanatory note	-					

4.2.4 automatic gain control

Automatic gain adjustment means that the HR3 series servo drive will automatically generate a set of matching base gain parameters internally according to the parameter setting of "P1A group-Advanced Adjustment function-Response Level selection" to meet the requirements of speed and stability.

HR3 series servo provides two automatic gain adjustment modes: 1. Basic mode; 2. Positioning mode.

pay attention to:

Be sure to get the load inertia ratio correctly before using the automatic gain adjustment function!

(1) Standard rigid table pattern

Real-time automatic gain adjustment-standard rigid table mode (201A-01h=1) is suitable for most situations, and the value range of the response level (201A-02h) is between 0 and 40 levels. The higher the response level, the stronger the gain, and the faster the response. Depending on the load types, the following empirical values are available:

Table 4-12 Response level reference

Recommended response level	Load mechanism type
Level 4 ~8	Some large machinery
Level 8 ~15	Belt for applications such as lower rigidity
Level 15 to level 20	Ball wire, direct connection and other more rigid applications
Level 20 to level 40	Direct connection to high rigidity, small inertia load applications

Real-time automatic adjustment of standard rigid table mode (201A-01h=1), the parameters of basic gain (2006-01h~2006-03h, 2007-03h), automatically updated according to the response level set in 201A-02h-and the corresponding index code:

Table 4-13 Real-time automatic adjustment mode to automatically update the parameters

Index code	name
2006-01h	The velocity proportional gain of 1
2006-02h	The velocity-integral gain of 1
2006-03h	Position-scale gain of 1
2007-03h	Recurrent filter 1

(2) Rapid positioning mode

Rapid positioning mode (201A-01h=2)

Fast positioning mode in the HR3 servo internal, automatically implemented4.2.3The gain switching function introduced in and0The feedforward control function introduced in the section organically combines the two to realize the rapid positioning effect. On the basis of "Automatic Adjustment-Standard

Rigid Table Mode", the second gain (2006-04h~2006-06h, 2007-04h) parameter is also automatically updated and stored in the corresponding index code according to the response level set in 201A-02h, and the position ring gain of the second gain parameter should be a response level higher than the first gain parameter.

Table 4-14 Quick positioning mode automatically updates the parameters

Index code	name
2006-04h	Speed ratio gain of 2
2006-05h	Speed-integral gain of 2
2006-06h	Position-scale gain of 2
2007-04h	Recurrent filter 2

Speed feedforward related parameters are set to fixed values:

Table 4-15 Quick positioning mode fixed parameters

Index code	name	parameter values
2006-08h	Speed-feedforward proportional gain	30.0%
2006-07h	Speed-feedforward filtering time	0.50ms

Gain switching related parameters are set to fixed values:

In the fast positioning mode, the gain switching function is automatically enabled.

Table 4-16 Quick positioning mode gain parameters

Index code	name	parameter values	explain
2006-10h	Gain Switch-mode selection	1	In the fast positioning mode, the first gain (2006-01h~2006-03h, 2007-03h) and the second gain (2006-04h~2006-06h, 2007-04h) switch effectively; Outside of the fast positioning mode, keep the original setting.
2006-11h	Gain Switch-Conditional Selection	10	In the quick positioning mode, the gain switching condition is 2008-0Ah=10; Outside of the fast positioning mode, keep the original setting.
2006-12h	Gain switch-time delay	5.0ms	In the fast positioning mode, the gain switching delay time is 5.0ms; Outside of the fast positioning mode, keep the original setting.
2006-13h	Gain Switch- -level	50	In the quick positioning mode, the gain switching level is 50; Outside of the fast positioning mode, keep the original setting.
2006-14h	Gain switching- -time lag	30	In the fast positioning mode, the gain switching time delay is 30; Outside of the fast positioning mode, keep the original setting

⚠ pay attention to:

In the automatic gain adjustment mode, the parameters automatically updated with the response level selection (201A-02h) and the parameters with a fixed value cannot be modified manually. To modify, the 201A-0-1 h must be set to 0 to exit the real-time automatic adjustment mode.

Table 4-17 Advanced adjustment index code

0x201A-Advanced Adjustment		
subindex	0x01-Real-time self-adjustment settings	0x02-Response level setting
data type	UINT16	
accessibility	Readable / scripted	Readable / scripted
unit	-	-
Windows default	7	16
least value	0: invalid 1: Standard rigid table mode 2: Quick positioning mode 5: Adaptive imputation mode 7: adaptive positioning mode	0
crest value		40
Set and effective mode	Run Set / Effective immediately	Run Set / Effective immediately
Related mode	PST	
explanatory note	-	

4.3 vibration abatement

4.3.1 notch filter

When the servo gain coefficient is relatively large, the high frequency vibration component cannot be effectively attenuated, which will stimulate the system resonance. In order not to weaken the servo response performance, the mechanical load is smoothly driven when the gain is not reduced, and the resonance needs to be effectively suppressed. Generally, the servo manufacturer will set the trap in the front channel of the control loop to weaken the loop gain amplitude at the resonance point to achieve the purpose of vibration suppression.

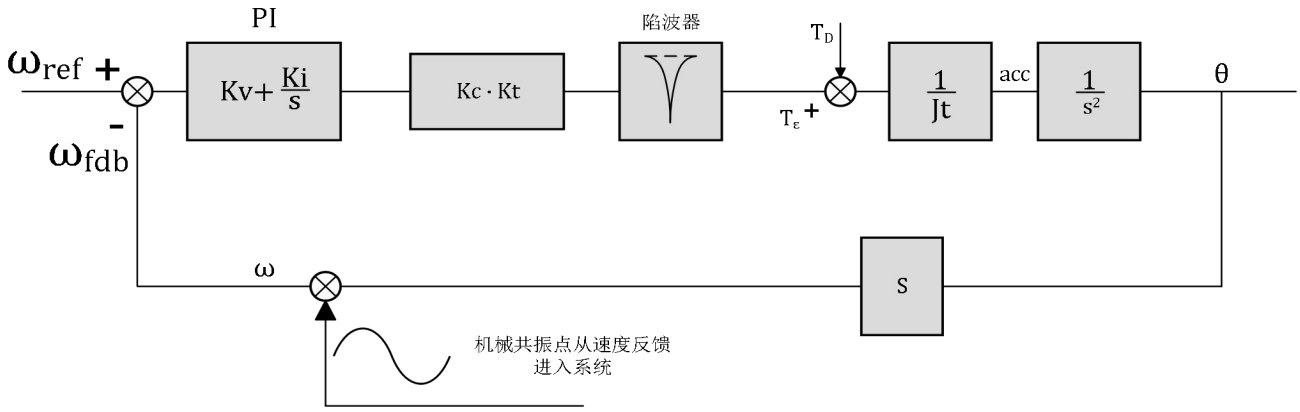

Figure 4-5 Resonance-based inhibitory control block diagram

The notch filter transfer function is,

$$G_{notch}(s) = \frac{s^2 + 2\zeta_1\omega_n s + \omega_n{}^2}{s^2 + 2\zeta_2\omega_n s + \omega_n{}^2}$$

4.3.2 vibration abatement

HR3 series servo built-in adaptive vibration suppression algorithm, through the actual operation process, extract the vibration components in the motor speed, infer the resonance frequency, automatically set the relevant parameters of the adaptive trap, to achieve the purpose of vibration suppression.

(1) Automatic trap

Open the adaptive trap function, just set "P1A group-advanced adjustment-vibration suppression mode selection" to 1 or 2 in the background software; HR3 series servo supports up to four adaptive traps. When the system has 5 or more resonance points, the trap needs to be set manually and supports up to 4 different notch frequency settings.

⚠ pay attention to:

Table 4-18 Factors of adaptive vibration

	Factors affecting adaptive vibration inhibition
resonance characteristics	■ When the resonance frequency is below the velocity response frequency ■ In the presence of more than three resonance points ■ When the vibration amplitude is small, or the control gain is low, and the effect on the motor speed is not obvious
mechanical properties	■ Nonlinear factors such as excessive engagement tooth gap or excessive positive and reversal operation back gap during operation, such as gear transmission mechanism and different gear installation conditions ■ Vibration components appear randomly and for a short time
Exercise conditions	■ Rapid acceleration and deceleration, when the acceleration is greater than 30,000 rp m/s ■ When the servo operates in the torque mode

(2) Manual trap

A） Analyze the resonance frequency;

When using a manual trap, the frequency of the trap needs to be set to the actual resonance frequency.

Resonant frequency can be obtained through the oscilloscope interface of drive debugging platform in the following two methods:

1) The motor current displayed through the oscilloscope interface is obtained (phase current, torque instruction, current feedback can be obtained). As shown in the figure below, the measured period is 0.625ms, and the resonance frequency is calculated:

f = 1/t =1600 Hz

2) Obtained by the "resonance point identification" function of the oscilloscope interface. As shown in the figure below, the measured resonance frequency is set at 1593.750Hz.

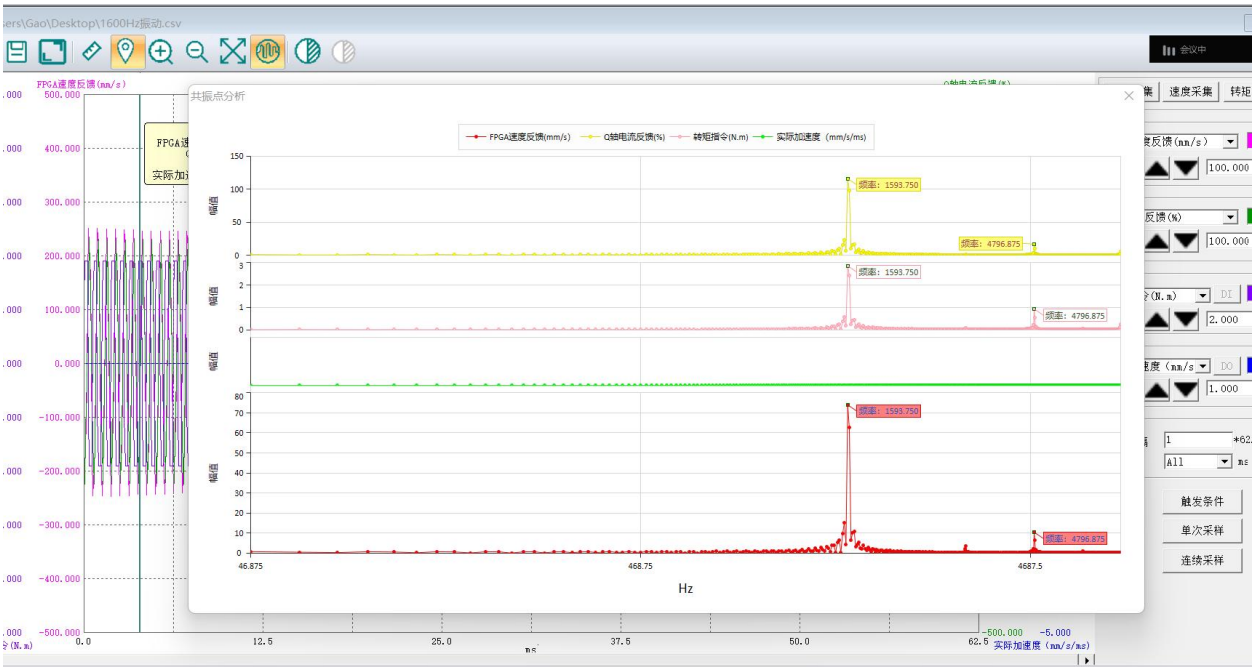

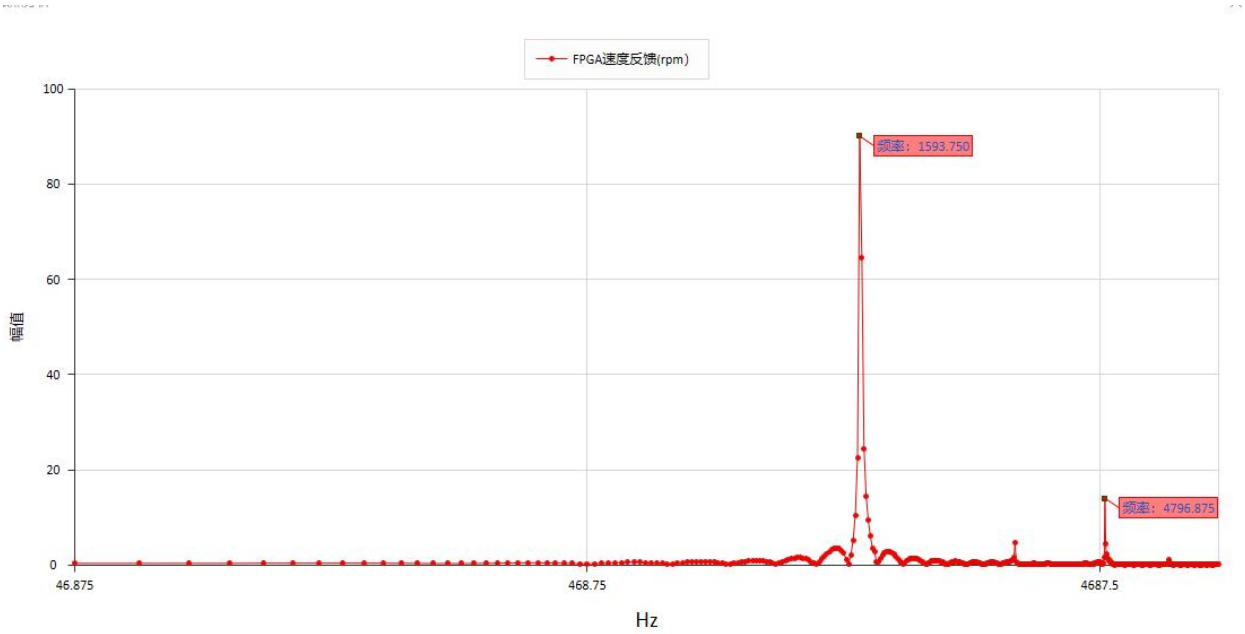

Figure 4-6 Screenshot of the resonance point recognition function of the background software

B） Enter the resonance frequency obtained in step A) into the notch frequency parameter of a notch device, and other parameters are generally not set;

If the resonance is suppressed, it means that the trap is effective and the gain can be adjusted continuously. If the gain increases, a new resonance appears, repeat step A) ~B);

If the vibration cannot be eliminated for a long time, please close the servo enabling force in time to reduce the loop gain.

(3) low pass filter

You can also decay all high frequency vibration components above the turning frequency below the sensitive value by setting a suitable torque low-pass filter.

Torque instruction filtering can be set in two ways,

I) The background debugging software "P07 set of filtering parameters-torque filtering"

II) Object dictionary, object word (2007-03h)

By setting the filtering time constant, the torque instruction is attenuated in the high frequency band above the cutoff frequency to achieve the purpose of suppressing the mechanical resonance.

The torque low-pass filtering set the parameter to the filtering time constant in 0.01ms and the filtering time constant$\tau_{And\ m\ and\ the\ filter\ cutoff\ frequency}$$f_{The\ conversion\ relationship\ between\ c\ is:}$

$$f_c = \frac{1}{2\pi \times \tau_m \times 0.001}$$

4.4 Common application scenarios

4.4.1 Rolling bead wire bar load

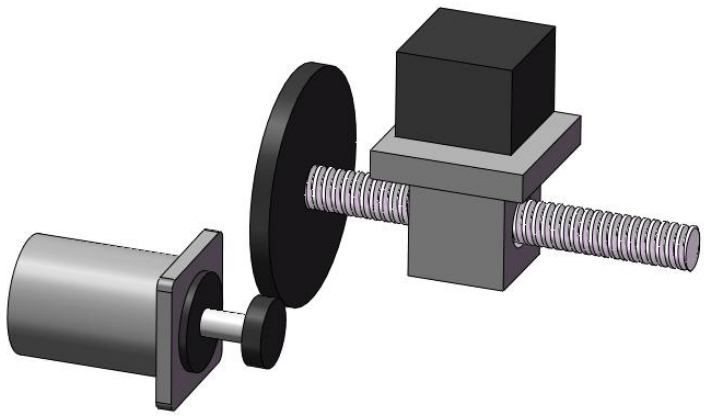

Figure 4-7 Ball-screw screw drive chain

(1) The characteristics of the ball and silk bars

- The friction resistance is small, the difference of static friction is very small, can ensure the smooth movement, not easy to produce low speed crawling phenomenon. Small wear, long life, good precision retention.
- With double nut pre-tightening, the clearance can be eliminated and the transmission stiffness is high.
- Frictional loss is small, high transmission efficiency, up to 90%~96%.

(2) Debug point of attention

- The wire rod load transmission stiffness is high, generally it is easier to adjust, generally the inertia ratio is reasonable, only need to identify the inertia, pressSection 4.2.4 Automatic Gain AdjustmentAutomatic gain adjustment is sufficient.
- If the response performance requirements is very high, but also need to pressSection 4.2.2 Manual gain adjustmentIntroduction to necessary manual gain adjustment, even resonance analysis and suppression, for referenceSection 4.3 shows vibration inhibition。

4.4.2 ynchronized with load

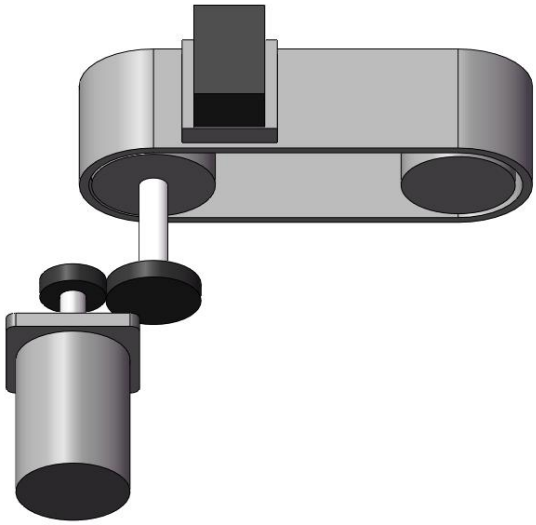

Figure 4-8 Synchronized with transmission chain

(1) Synchronous belt drive characteristics

- During operation, the bumps of the synchronous belt engage with the belt groove to transfer movement and power.
- There is no sliding during the working process, and there is an accurate transmission ratio, so it is called the synchronous belt.
- High transmission efficiency, good energy-saving effect. Have a high transmission efficiency, generally up to 98%.
- Transmission ratio range is large, compact structure and weak rigidity.

(2) Debug point of attention

- The synchronous band with a short length is still very easy to debug. If the inertia ratio is reasonable, we only need to identify the inertia ratio and make automatic gain adjustment.
- If the synchronization band is longer and the inertia is larger, it is easy to overshoot and overshoot at this time. The position command form requirement is high, and the position instruction filtering can be performed under the servo.

4.4.3 Gear tooth load

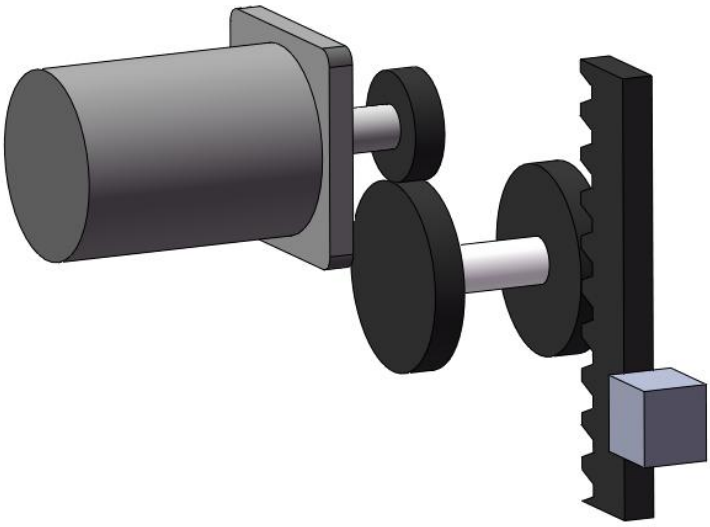

Figure 4-9 Gear-rack drive chain

(3) Gear and rack drive characteristics

- Can be configured with a large deceleration ratio, strong load drive ability. Increase the output torque by reducing the load running speed.
- Transmission back gap is large, it will lose a part of the transmission accuracy.

(4) Debug point of attention

- With reducer can generally effectively reduce the load inertia ratio, so this kind of equipment inertia ratio is relatively small, debugging is simple, generally automatic gain adjustment can be used.
- The rack is rigid in different positions, and the processing accuracy of the rack may be different. It is necessary to ensure the full operation range, without vibration and operating noise.

4.4.4 Used disk load

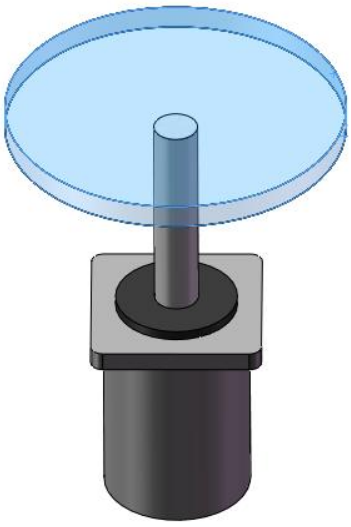

Figure 4-10 Direct continuous inertia plate

(5) Direct connection to inertia disk load characteristics

- Direct inertia disk load has good transmission accuracy.
- Highly synchronous with the motor, with no back gap, and high transmission rigidity.
- The resonance frequency is low. According to the resonance point, the maximum accessible bandwidth of the system should be lower than the resonance point in addition to far from the resonance point.

(6) Debug point of attention

- This connection mode will inevitably bring a large inertia ratio to the motor, so the speed gain cannot be set too high.
- Motor vertical installation condition, common in the separation control application, requires fast, accurate start and stop, can refer to4.2.3Section is adjusted using gain switching.
- Motor horizontal installation condition, generally with more inertia and easier to produce vibration; the gain cannot be set too high, requiring resonance analysis and suppression.

5 Fault and warning handling

5.1 Display and view

The alarm of HR3 series servo is divided into fault and warning. The main difference between the two is that the servo will stop running when the failure occurs, and the servo can still operate normally when the warning occurs. According to the display of the fault or warning on the panel, the detailed description and treatment method of the corresponding fault or warning can be found in this manual.

After power-on, when the servo panel is not bright or the last three digits do not display "rdy", the possible reasons and treatment are as follows:

Table 5-1 The power servo is not ready for the troubleshooting method

order number	failure cause	Confirmation method
1	Main power supply voltage fault	Referring to the specification and confirm the power supply of drive 220VAC.
2	Servo drive failure	Contact the manufacturer for the after-sales service.

After power on, when the servo failure or warning, the panel will give the corresponding display. The definitions are shown as follows:

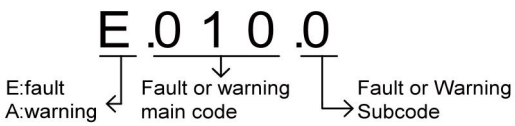

Figure 5-2 Example of failure display

For example, the panel shows E.010.0 indicating the servo drive failed, the fault main code is 0x010 and the fault subcode is 0x0; the panel shows A.218.0 indicating the servo drive was warned, the warning main code is 0x218 and the warning subcode is 0x0.

After troubleshooting the above faults, the last three bits of the panel shall display "rdy".

The HR3 series servo drive has a fault recording function to record the last 10 fault and warning names and the status parameters of the servo drive when the fault or warning occurs. If a repeated fault or warning occurs in the last 5 times, the fault or warning code or drive status is recorded only once.

The fault and warning are still preserved after the fault or warning is reset. You can view and clear the history by using the fault & warning management module in the DriverStart debug software. Refer to DriverStart instructions for details.

In addition, the current fault through the fault & warning management module in DriverStart.

5.2 Fault code list

Table 5-2 Fault code list

fault code	Fault name	Can reset	CiA402 Protocol error code (603 Fh)
E.010	Software parameter failure	×	0x6320
E.011	Software internal communication initialization failure	×	0x7500
E.012	The software version does not match the product model number	×	0x7500
E.013	Software internal interrupt timeout failure	×	0x7500
E.014	Software internal communication timeout failure	×	0x0014
E.015	Current sampling timeout fault	×	0x0015
E.016	Torque instruction update timeout fault	×	0x0016
E.017	Parameter storage failure	×	0x5530
E.018	Parameter out of range fault	×	0x6320
E.019	Product matching failure	×	0x7122
E.210	Hardware overflow failure	×	0x2312
E.211	Output short-circuit to the ground fault	×	0x2330
E.212	The UVW phase sequence fault	×	0x0212
E.213	Speed failure	×	0x0213
E.214	Control power supply undervoltage fault	×	0x3120
E.216	STO hitch	√	0x0216
E.217	Input a phase miss fault	√	0x3130
E.218	Servo emergency stop failure	√	0x5442
E.219	High drive temperature fault	√	0x4210
E.227	Output phase absence failure	√	0x0227
E.228	Pre-charging abnormal failure	√	0x0228
E.228	Pre-charging abnormal failure	√	0x0228
E.411	The DI function assignment fault	√	0x6320
E.412	DO function assignment failure	√	0x6320
E.413	Current calculation overflow fault	√	0x0413

fault code	Fault name	Can reset	CiA402 Protocol error code (603 Fh)
E.414	DC bus undervoltage fault	√	0x3220
E.415	Dc bus overvoltage fault	√	0x3210
E.416	Overspeed failure	√	0x8400
E.417	High startup speed fault	√	0x0417
E.418	Repeated failure failure on the servo	√	0x5441
E.419	Drive overload fault	√	0x3230
E.420	High frequency distribution output frequency fault	√	0x0420
E.421	Electronic gear ratio is set wrong	√	0x0421
E.422	Full closed loop parameter set wrong	√	0x0422
E.423	Excessive position deviation and large fault	√	0x8611
E.424	Position command overspeed fault	√	0x0424
E.430	Gantry compensation data overflow	√	0x0430
E.710	Overspeed failure	√	0x8400
E.711	Usage fault identification	√	0x0711
E.712	Magnetic electrode identification failure	√	0x0712
E.715	Identification of the motor parameters has failed	√	0x0715
E.716	Gain self-adjustment fault	√	0x0716
E.910	Encoder parameter failure	×	0x7305
E.911	Encoder communication failure	×	0x7305
E.912	Encoder parameter calibration error fault	×	0x7305
E.913	Encoder three-phase Hall logic error fault	×	0x7305
E.914	Encoder disconnection fault	×	0x7305
E.916	Encoder disconnection fault	√	0x7306
E.917	Encoder battery failure	√	0x7305
E.918	Encoder multiple lap count error	√	0x7305
E.919	Encoder multi-lap counter overflow fault	√	0x7305
E.922	Encoder overheating warning	√	0x0922
E.B10	Motor overload fault	√	0x3230

fault code	Fault name	Can reset	CiA402 Protocol error code (603 Fh)
E.B11	Motor blockage and rotation failure	√	0x7121
E.B13	Motor vibration fault	√	0x0B13
E.B14	Run anomaly detection	√	0x0B14
E.B15	Motor PTC fault	√	0x0B15
E.D15	The upper and lower limits of soft limit are set correctly	√	0x0D15
E.D16	The origin bias exceeds the soft limit range	√	0x0D16
E.D20	EtherCAT Communication disconnection	√	0x0D20
E.D21	EtherCAT Communication is prohibited	√	0x0D21
E.D22	EtherCAT Communication connection was timed out	√	0x0D22
E.D23	EtherCAT Extension card communication timeout	√	0x0D23
E.D24	EtherCAT Site name conflict	√	0x0D24
E.D25	EtherCAT Site name is incorrectly set	√	0x0D25
E.D26	EtherCAT Communication is abnormal	√	0x0D26
E.D27	EtherCAT System parameter error	√	0x0D27
E.D28	EtherCAT Configuration error	√	0x0D28
E.D29	EtherCAT No XML file was burned	√	0x0D29
E.D30	EtherCAT Communication initialization failed	√	0x0D30
E.D31	EtherCAT Wrong synchronization cycle setting	√	0x0D31
E.D32	EtherCAT The synchronous signal deviation is too large	√	0x0D32

Figure 5-3 pay attention to:

"√" Represents that the fault allows reset, see the reset method0. It should be noted that the failure can be successfully reset on the premise that the fault source has been removed.

"×" Represents that the fault is not reset and must be repowered on.

5.3 Warning code list

All warnings can be reset automatically, after the warning condition is removed. Or press any key on

the control panel to reset.

Table 5-3 Warning code list

Warning display	Warning name	CiA402 Protocol error code (603 Fh)
A.220	Forward over-range warning	0x5443
A.221	Negative extended range warning	0x5444
A.222	Enter a phase-deficiency warning	0x3130
A.224	Regeneration resistance overload warning	0x3210
A225	The brake resistance is not warned	0x0225
A.226	External regeneration resistance value is too small warning	0x6320
A.425	Origin returns to zero failure warning	0x0425
A.426	Repower warning is required	0x6320
A.427	The parameter stores an exception warning	0x7600
A428	Ffrequency output set error warning	0x0428
A.920	Encoder exception warning	0x7305
A.921	Encoder battery voltage is too low warning	0x7305
A.D35	The error warning is set in the return to zero mode	0x6320

5.4 fault and warning

Table 5-4

Fault Code	Fault Name	Faule Cause	Solution Measure
E.010.0	Software ParameterFault	1.Upgraded the new firmware. 2.Wrote abnormal parameters	Restore factory parameters (P0501=1) and check if the "manufacturer parameters" are abnormal.
E.013.X	Software Internal Interrupt Timeout Fault	1.FPGA fault. 2.Internal hardware abnormality	Replace the servo drive.
E.015.X	Current Sampling Timeout Fault	1.Power line output disconnection or poor contact. 2.Current sampling fault.	1.Check the Power line connection for damage. 2.Replace servo drive.

Fault Code	Fault Name	Faule Cause	Solution Measure
E.018.X	Parameter Out of Range Fault	1.Software has been updated 2.EEPROM fault.	1.Restore factory parameters (P0501=1) and check if the "manufacturer parameters" are abnormal. 2.Replace servo drive.
E.019.X	Product Matching Fault	1.Product number (encoder or motor or drive) does not exist. 2.The rated current of the motor is greater than the rated current of the driver.	1.Set the correct encoder type (P0100). 2.Replace with a higher power driver.
E.210.X	Hardware Overcurrent Fault	1.Driver fault. 2.The motor is burnt out. 3.Unreasonable gain parameter settings and motor vibration Dang.	1.Replace the drive. 2.Replace the motor. 3.Perform gain adjustment again.
E.211.X	Ground Short Circuit Fault	1.Short circuit between the motor and ground. 2.Servo drive fault. 3.The main line voltage release point (P0219) is set too low.	1.Check the insulation of the drive power cable. 2.Replace the drive. 3.Correctly set the main line voltage release point (P0219).
E.212.0	UVW Phase Sequence Error	The UVW phase sequence of the driver and motor does not match.	Correctly connect the UVW cables in the right phase sequence.
E.213.0	Overcurrent Fault	1.Incorrect UVW phase sequence wiring. 2.incorrect initial rotor phase of the motor. 3.The vertical axis is overloaded.	1.Correctly connect the UVW cables in the right phase sequence. 2.Redo the angle self-learning. 3.Reduce the vertical axis load or shield the fault without compromising safety.
E.910.X	Encoder Parameter Fault	1.The type of the driver and motor do not match. 2.Parameter error or not stored in encoder.	1.Set the correct motor type. 2.Write the correct motor parameters.
E.911.X	Encoder Communication Fault	1.Encoder wiring error. 2.Encoder cable loose. 3.Encoder signal interference (related to EMC issues).	1.Reconnect according to the correct wiring diagram. 2.Ensure tight connection of encoder wiring terminals. 3.Use our standard encoder cable.
E.912.0	Encoder Parameter Verification Error	1.Encoder disconnected or loose. 2.Encoder parameter read/write abnormality.	1.Check the encoder wiring. 2.Rewrite the motor parameters.
E.219.0	Driver Overtemperature Fault	1.After the overload is cleared, the drive runs repeatedly.	1.wait 30 seconds after overload before resetting,deceleration times and reduce the load. 2.Check the fan.

Fault Code	Fault Name	Faule Cause	Solution Measure
		2.Fan damaged.	
E.411.X	DI Function Allocation Fault	1.DI function number exceeds. 2.Duplicate DI Function Assignment.	1.After restoring system parameters to default (P0501=1), power on again. 2.Do not assign DI function numbers beyond the DI function definition table.
E.412.0	DO Function Allocation Fault	DO function number exceeds.	Do not assign DO function numbers beyond the DO function definition table.
E.414.0	DC Bus Undervoltage Fault	1.Momentary power outage occurs. 2.Voltage drop in power supply during operation. 3.Three phase input only connected to single-phase	Check the input power supply.
E.415.0	DC Bus Overvoltage Fault	1.Main circuit input voltage too high. 2.The motor is in a rapid deceleration state, and the brake resistor has failed.	1.Check the input power supply. 2.Replace the brake resistor.
E.416.0	Overspeed Fault	1.Incorrect phase sequence of motor cables U, V, W. 2.Incorrect motor or encoder parameter settings. 3.Initial angle identification error of motor. 4.Motor speed closed-loop overshoot.	1.Wire the U, V, W phases correctly. 2.Set motor parameters or encoder resolution correctly. 3.Re angle identification. 4.Perform gain adjustment again.
E.711.X	Inertia Identification Fault	Offline inertia identification is not completed.	Contact the manufacturer's technical support.
E.712.0	Pole Identification Fault	Failure in identifying the initial magnetic pole angle of the motor.	Disconnect the motor shaft and re-identify the angle.
E.B10.0	Motor Overload Fault	1.The processing cycle is frequent, the acceleration and deceleration time is set too short, and the load is too heavy. 2.The motor power model has been selected too small.	1.Reduce processing speed and increase acceleration and deceleration time. 2.Replace with a higher power motor.
E.B11.0	Motor Stall Fault	1.Incorrect phase sequence of motor cables U, V, W. 2.Motor angle error。 3.The encoder	1.Wire the U, V, W phases correctly. 2.Re angle identification. 3.Set the correct P0100 parameter.

Fault Code	Fault Name	Faule Cause	Solution Measure
		communication protocol (P0100) is set incorrectly. 4.Motor stalling caused by mechanical factors, resulting in excessive load during operation.	4.Check the mechanical structure.
E.017.X	Parameter Storage Fault	Abnormal storage of drive parameters	1.After restoring initialization (P0501=1), set P0510=0. 2.Replace servo drive.
E.217.X	Input Phase Loss Fault	1.Three-phase drive connected to single-phase input. 2.Poor wiring of three-phase input. 3.Unbalanced or low three-phase voltage.	1.Connect three-phase input power supply. 2.Check the three-phase power supply wiring. 3.For three-phase rated drives that allow single- phase operation (below 1kW), disable alarms (set P0800=2).
E.218.0	Servo Emergency Stop Fault	Emergency stop triggered.	Under the premise of confirming safety, the emergency stop function can be released (emergency stop release, automatic reset of emergency stop fault)
E.227.X	Output Phase Loss Fault	1.Motor U or V or W phase power line disconnected. 2.Hardware damage	1.Check the motor power cable connection. 2.Replace the drive.
E.418.X	Servo Repeated Enable Fault	When the servo is internally enabled, it is externally repeatedly enabled.	Close the internal enable of the servo.
E.419.0	Driver Overload Fault	1.The processing cycle is frequent, the acceleration and deceleration time is set too short, and the load is too heavy. 2.The power model of the driver has been selected too small.	1.Reduce processing speed and increase acceleration and deceleration time. 2.Replace with a higher power driver.
E.421.X	Electronic Gear Ratio Setting Error	The set value of electronic gear ratio exceeds the range.	Set the gear ratio according to the range of the electronic gear ratio.
E.423.X	Excessive Position Deviation Fault	1.The U, V, W outputs of the driver lack phase or disconnection. 2.The encoder is inserted incorrectly. 3.Motor stalling due to mechanical factors. 4.The gain of the servo drive is low. 5.The incremental	1.Check the UVW output cable. 2.Check the encoder cable. 3.Investigate mechanical factors. 4.Perform manual or automatic gain adjustment. 5.Increase the acceleration and deceleration ramps of the position command. 6.Increase the deviation threshold 6065h/P0806.

Fault Code	Fault Name	Faule Cause	Solution Measure
		position command is too large. 6.The deviation threshold 6065h/ P0806 is too small.	
E.424.X	Position Command Overspeed Fault	1.The position command increment received by the servo is too large. 2.The motor speed limit is set incorrectly.	1.Decrease the target position command increment. 2.Set the planned speed of the upper computer to be less than the maximum speed of the motor.
E.917.0	Encoder Battery Fault	1.Absolute encoder is not connected to the battery. 2.Encoder battery voltage is too low.	1.Reconnect the battery or replace it with a new one. 2.Set P2005=1 to clear the fault.
E.918.0	Encoder Multi-turn Counting Error	Encoder internal fault.	Set P2005=2 to clear the fault and power on again. If the fault cannot be eliminated, the motor needs to be replaced.
E.919.X	Encoder multi turn counter overflow fault	The multi circle data is 32767 or 32768.	Set P2005=2 to clear the encoder's multi turn data and power on again.
E.B13.0	Motor Vibration Fault	Motor vibration occurs	1.Adjust the gain parameters. 2.Enable vibration suppression.
E.D26.X	EtherCAT Communication Abnormality	1.When the servo is enabled, the EtherCAT network switches out of the OP state. 2.The synchronization signal SYNC is abnormal.	Check the upper computer network status switching program. Contact manufacturer technical support.
E.D29.0	EtherCAT XML File Not Burned	1.The XML file has not been burned. 2.The internal XML file of the drive is damaged.	Re burn the XML file.
E.D31.0	EtherCAT Sync Period Setting Error	Synchronization period setting error.	The synchronization period needs to be set as an integer multiple of the position loop period (250us).
E.D32.0	EtherCAT Sync Signal Deviation Too Large	Sync period error value exceeds the threshold	Increase the synchronization deviation threshold (P0A32).
A.220.0	PositiveTravel Exceeding Warning	Positive limit input active	Under confirmed safety, give the motor a nagat- ive command to invalidate the forward limit.

Fault Code	Fault Name	Faule Cause	Solution Measure
A.221.0	Negative Travel Exceeding Warning	Nagative limit input active	Under confirmed safety, give the motor a forward rotation command to invalidate the negative limit.
A.222.0	Input Phase Loss Warning	Missing phase in three-phase power input.	1.Check the three-phase power supply connection. 2.For three-phase rated drives that allow single- phase operation (below 1 kW), disable alarms (set P0800=2).
A.224.0	Regenerative Resistor Overload Warning	1.Regeneration resistor is not connected or connected incorrectly. 2.The power of the connected regenerative resistor is too low. 3.Incorrect parameter settings for regenerative resistors: type, resistance, power, etc.	1.Check the wiring of the regeneration resistor. 2.Replace with a higher power regeneration resistor. 3.Set the regeneration resistor parameters correctly.
A.225.X	Regenerative Resistor Not Connected Warning	No regeneration resistor connected.	Refer to the user manual to check the connection of the regeneration resistor.
A.226.0	Regenerative Resistor Not Connected Warning	The value of the external regeneration resistor is less than the minimum allowable value specified in the specifications.	Correctly set the parameters related to the external regeneration resistor.
A.425.0	Origin Return Timeout Warning	1.The itinerary is too long, and the time limit for finding the origin is too short. 2.The speed of searching for the origin switch signal is too slow. 3.Switch abnormality: Positive limit or negative limit or origin switch are simultaneously activated or the switch signal cannot be detected.	1.Increase the origin search time P1349. 2.Increase the homing high speed 6099-01h. 3.Check the switch signal.
A.426.0	Require Reboot Warning	Modified the parameters that need to be re powered on to take effect.	Power on again or reset the software.
A.921.0	Encoder Battery Low Voltage Warning	The voltage of the absolute value encoder battery is below 3.0V	Check the power supply cable of the encoder or replace it with a new battery.
A.D35.0	Zero Return Method Setting	The reset method is set incorrectly.	Correctly set 6098h (does not support zeroing

Fault Code	Fault Name	Faule Cause	Solution Measure
	Error Warning		methods such as 15/16/31/32).

5.5 The reduction method

The HR3 series servo failure and warning can be reset in the following three ways:

- Set the parameter P20.03 = 1 for reset;
- Reset through DI input (function 5, fault reset);
- Reset through the rising edge of Bit 7 with the control word 0x6040 set by the upper computer;

For the fault reset, the servo enable should be closed first, and then give the fault reset signal; for the warning reset, the fault reset signal can be given directly. The premise of the successful reset of the fault is that the fault condition has been removed. The warning is automatically reset after the warning condition is removed.

6 Parameter List

Param.	Name	Unit	Value	Data Type	Default	Change
00 Motor Parameters						
P0003	Motor SN	-	0~65535	UINT16	0	At stop
P0010	Rated voltage	V	0-220V	UINT16	0	At stop
P0011	Rated current	0.01A	0~65535	UINT16	470	At stop
P0012	Rated power	0.01kW	0~65535	UINT16	75	At stop
P0013	Rated torque	0.01Nm	0~4294967295	UINT32	239	At stop
P0017	Rated speed	rpm	0~65535	UINT16	3000	At stop
01 Encoder Parameters						
P0100	Bus encoder type	-	0~65535	UINT16	11233	At stop
P0103	Encoder version	-	0~65535	UINT16	0	Unchangeable
P0105	Customized No.	-	0~4294967295	UINT32	1048576	At stop
02 Servo Drive Parameters						
P0200	MCU software version	-	0~65535	UINT16	0	Unchangeable
P0201	FPGA software version	-	0~65535	UINT16	0	Unchangeable
P0202	MCU Customized No.	-	0~4294967295	UINT32	0	Unchangeable
P0204	FPGA Customized No.	-	0~4294967295	UINT32	0	Unchangeable
P0212	Voltage class	-	0~65535	UINT16	220	Unchangeable
P0213	Rated power	0.01kW	1~65535	UINT16	75	Unchangeable
P0215	Rated current	0.01A	1~65535	UINT16	550	Unchangeable
P0234	Regenerative resistor type	-	0- Built-in 1- External, natural ventilated 2- External, forced air cooling 3- Not needed	UINT16	0	At stop
P0235	Resistor heat dissipation coefficient	-	10~100	UINT16	30	At stop
P	Power of built-	W	1~65535	UI	4	Unchan

Param.	Name	Unit	Value	Data Type	Default	Change
0236	in regenerative resistor			NT16	0	geable
P 0237	Resistance of builtin regenerative resistor	Ω	1~1000	UINT16	50	Unchangeable
P 0238	Min.Resistance of external regenerative resistor	Ω	1~1000	UINT16	40	Unchangeable
P 0239	Power capacity of external regenerative resistor	W	1~65535	UINT16	40	At stop
P 0240	Resistance of external regenerative resistor	Ω	1~1000	UINT16	50	At stop
03 IO Parameters						
P 0300	DI1 function	-	0- null 1-SON 2- Emergency stop 3- Position reference inhibited 4- ClrPosErr 5- ALM-RST 6- ZCLAMP 7- JOGCMD+ 8- JOGCMD- 9- P-OT 10- N-OT 11- HomeSwitch 12- HomingStart 13- speed limit source 14- Positive external torque limit 15- Negative external torque limit 16- Multi-position reference enable 19- Torque reference direction 20- Speed reference direction 21- Position reference direction 22- Gain switchover switch 23- Switchover between main and auxiliary commands 24- Mode switchover 1 25- Mode switchover 2 26- Electronic gear ratio selection	UINT16	9	At stop

Param.	Name	Unit	Value	Data Type	Default	Change
			27- Multi-reference switchove 1			
			28- Multi-reference switchove 2			
			29- Multi-reference switchove 3			
			30- Multi-reference switchove 4			
			31- through DI in Home switch			
P0301	DI1 logic selection	-	0- Active low	UINT16	0	At stop
			1- Active high			
P0302	DI2 function selection	-	See P0300	UINT16	10	At stop
P0303	DI2 logic selection	-	0- Active low	UINT16	0	At stop
			1- Active high			
P0304	DI3 function selection	-	See P0300	UINT16	11	At stop
P0305	DI3 logic selection	-	0- Active low	UINT16	0	At stop
			1- Active high			
P0306	DI4 function selection	-	See P0300	UINT16	1	At stop
P0307	DI4 logic selection	-	0- Active low	UINT16	0	At stop
			1- Active high			
P0308	DI5 function selection	-	See P0300	UINT16	5	At stop
P0309	DI5 logic selection	-	0- Active low	UINT16	0	At stop
			1- Active high			
P0310	DI6 function selection	-	See P0300	UINT16	4	At stop
P0311	DI6 logic selection	-	0- Active low	UINT16	0	At stop
			1- Active high			
P0312	DI7 function selection	-	See P0300	UINT16	6	At stop
P0313	DI7 logic selection	-	0- Active low	UINT16	0	At stop
			1- Active high			
P0314	DI8 function selection	-	See P0300	UINT16	0	At stop
P0315	DI8 logic selection	-	0- Active low	UINT16	0	At stop
			1- Active high			
P0318	DI function allocation 1 (activated upon power-on)	-	0- null	UINT16	0	At stop
			1-SON			
			2- Emergency stop			
			3- Position reference inhibited			
			4- ClrPosErr			
			5- ALM-RST			
			6- ZCLAMP			
			7- JOGCMD+			
			8- JOGCMD-			
			9- P-OT			
			10- N-OT			
			11- HomeSwitch			

Param.	Name	Unit	Value	Data Type	Default	Change
			12- HomingStart			
			13- speed limit source			
			14- Positive external torque limit			
			15- Negative external torque limit			
			16- Multi-position reference enable			
P 0319	DI function allocation 2 (activated upon power-on)	-	0- null	UINT16	0	At stop
			19- Torque reference direction			
			20- Speed reference direction			
			21- Position reference direction			
			22- Gain switchover switch			
			23- Switchover between main and auxiliary commands			
			24- Mode switchover 1			
			25- Mode switchover 2			
			26- Electronic gear ratio selection			
			27- Multi-reference switchove 1			
			28- Multi-reference switchove 2			
			29- Multi-reference switchove 3			
			30- Multi-reference switchove 4			
			31- through DI in Home switch			
P 0320	DO1 function selection	-	0-null	UINT16	17	At stop
			1-rdy			
			2-Run			
			3-Warn			
			4-Alm			
			5-TGon			
			6-Zero			
			7-VCmp			
			8-VArr			
			9-TArr			
			10-(Near			
			11-Coin			
			12-Clt			
			13-Vlt			
			14-HomeOK			
			15-eHomeOK			
			17-BK			
			18-DB			
			19-AngRdy			
P	DO1 logic	-	0- Active low	UI	0	At stop

Param.	Name	Unit	Value	Data Type	Default	Change
0321	selection		1- Active high	NT16		
P0322	DO2 function selection	-	See P0320	UINT16	2	At stop
P0323	DO2 logic selection	-	0- Active low 1- Active high	UINT16	0	At stop
P0324	DO3 function selection	-	See P0320	UINT16	4	At stop
P0325	DO3 logic selection	-	0- Active low 1- Active high	UINT16	0	At stop
P0326	DO4 function selection	-	See P0320	UINT16	11	At stop
P0327	DO4 logic selection	-	0- Active low 1- Active high	UINT16	0	At stop
P0328	DO5 function selection	-	See P0320	UINT16	14	At stop
P0329	DO5 logic selection	-	0- Active low 1- Active high	UINT16	0	At stop
P0330	Forced DI/DO selection	-	0- No operation 1- Forced DI enabled, forced DO disabled 2- Forced DO enabled, forced DI disabled 3- Forced DI and DO enabled	UINT16	0	Immediate
P0331	Forced DI setting	-	0~511	UINT16	511	Immediate
P0332	Forced DO setting	-	0~31	UINT16	0	Immediate
P0334	Communication Forced DO selection	-	0~7	UINT16	0	At stop
P0344	AI1 input filter time	0.01ms	0~65535	UINT16	200	Immediate
P0345	AI1 input filter enable	-	0~1	UINT16	1	Immediate
P0348	AI2 input filter time	0.01ms	0~65535	UINT16	200	Immediate
P0349	AI1 input filter enable	-	0~1	UINT16	1	Immediate
P0362	Speed corresponding to AI 10V	rpm	0~6000	UINT16	3000	At stop
P0363	torque corresponding to AI 10V	倍	0~800	UINT16	100	At stop
04 Motion Control Parameters						
P0400	Control Mode	-	0- Speed Control Mode 1- Position control mode 2- Torque Control Mode	UINT16	1	At stop

Param.	Name	Unit	Value	Data Type	Default	Change
			3- Torque Control Mode -> Speed Control Mode			
			4- Speed Control Mode -> Position control mode			
			5- Torque Control Mode -> Position control mode			
			6- Torque Control Mode -> Speed Control Mode -> Position control mode			
P0401	Forward direction	-	0- Counterclockwise (CCW) as forward direction	UINT16	0	At stop
			1- Clockwise (CW) as forward direction			
P0402	Absolute position detection system	-	0- Incremental position mode	UINT16	0	At stop
			1- Absolute position linear mode			
			2- Absolute position rotation mode			
P0410	Stop mode at No.1 fault	-	0- Coast to stop, keeping deenergized state	UINT16	2	At stop
			1- DB stop, keeping de-energized state			
			2- DB stop, keeping DB state			
P0411	Stop mode at No.2 fault	-	0- Coast to stop, keeping deenergized state	UINT16	2	At stop
			1- Stop at zero speed, keeping deenergized state			
			2- Stop at zero speed, keeping dynamic braking state			
			3- DB stops, keeping operation state			
			4- DB stop, keeping DB state			
P0412	Stop mode at S-OFF	-	0- Coast to stop	UINT16	2	At stop
			1- DB stops			
			2- Stop at zero speed			
P0413	Stop state at S-OFF	-	0- keeping operation state	UINT16	1	At stop
			1- keeping DB state			
P0414	Stop mode upon main circuit power-off	-	0-P0412	UINT16	0	At stop
			1- Forced zero speed			
P0415	Stop mode at overtravel	-	0- Coast to stop, keeping deenergized state	UINT16	1	At stop
			1- Stop at zero speed, keeping position lock state			
			2- Stop at zero speed, keeping deenergized state			
P0423	Torque at T-OFF	0.1%	0~3000	UINT16	1000	At stop

Param.	Name	Unit	Value	Data Type	Default	Change
05 Function Parameters						
P0500	Manufacturer password	-	0~65535	UINT16	0	Immediate
P0501	Parameter	-	0- No operation 1- Restore default settings	UINT16	0	At stop
P0510	Communication memory	-	0- Disabled 1- Enabled	UINT16	1	Immediate
P0511	Power-off memory	-	0- Disabled 1- Enabled	UINT16	0	Immediate
P0512	BK switch	-	0- Disabled 1- Enabled	UINT16	1	At stop
P0513	S-ON brake open delay	ms	0~500	UINT16	250	Immediate
P0514	S-ON brake zero speed time	ms	1~1000	UINT16	150	Immediate
P0515	S-ON brake speed	rpm	0~3000	UINT16	30	Immediate
P0516	S-ON brake time	ms	1~1000	UINT16	500	Immediate
P0519	power-on test	-	0- Disabled 1- Enabled	UINT16 UINT16	1	At stop
P0523	Output pulse phase	-	0-Phase A leads phase B 1-Phase A lags behind phase B	UINT16	0	At stop
P0543	Software limit selection	-	0-No operation 1-Activated immediately 2-Activated after homing is done	UINT16	0	At stop
06 Gain Parameters						
P0600	Speed loop gain	0.1Hz	1~20000	UINT16	250	Immediate
P0601	Speed loop integral time constant	0.01ms	15~51200	UINT16	3183	Immediate
P0602	Position loop gain	0.1Hz	0~20000	UINT16	400	Immediate
P0608	Speed feedforward gain	0.1%	0~1000	UINT16	0	Immediate
P0609	Torque feedforward gain	0.1%	0~2000	UINT16	0	Immediate
P0610	Load moment of inertia ratio	-	0~12000	UINT16	200	Immediate
07 Filter time Parameters						
P0700	Position FIR filter	0.1ms	0~65535	UINT16	0	At stop
P0701	Time constant of moving average filter	0.1ms	0~1280	UINT16	0	At stop
P0702	Torque filter 1	0.01ms	0~3000	UINT16	79	Immediate

Param.	Name	Unit	Value	Data Type	Default	Change
P0706	Speed feedforward filter	0.01ms	0~6400	UINT16	50	Immediate
P0707	Torque feedforward filter	0.01ms	0~6400	UINT16	50	Immediate
P0710	Frequency of the 1st notch	Hz	50~5000	UINT16	5000	Immediate
P0711	Width level of the 1st notch	-	0~20	UINT16	2	Immediate
P0712	Depth level of the 1st notch	-	0~99	UINT16	0	Immediate
P0713	Frequency of the 2st notch	Hz	50~5000	UINT16	5000	Immediate
P0714	Width level of the 2st notch	-	0~20	UINT16	2	Immediate
P0715	Depth level of the 2st notch	-	0~99	UINT16	0	Immediate
P0716	Frequency of the 3st notch	Hz	50~5000	UINT16	5000	Immediate
P0717	Width level of the 3st notch	-	0~20	UINT16	2	Immediate
P0718	Depth level of the 3st notch	-	0~99	UINT16	0	Immediate
P0719	Frequency of the 4st notch	Hz	50~5000	UINT16	5000	Immediate
P0720	Width level of the 4st notch	-	0~20	UINT16	2	Immediate
P0721	Depth level of the 4st notch	-	0~99	UINT16	0	Immediate
P0747	Frequency of the A notch	Hz	10~1000	UINT16	1000	At stop
P0774	Low-speed filter	25ns	0~255	UINT16	30	At stop
P0775	High -speed filter	25ns	0~255	UINT16	3	At stop
P0776	speed reach filter	ms	0~5000	UINT16	10	At stop
08 Protection Parameters						
P0800	Power input phase loss protection	-	0- Enable phase loss fault 1- Enable phase loss fault and warning 2- Disabled	UINT16	0	Immediate
P0801	Encoder multi-turn overflow fault	-	0- Disabled 1- Enabled	UINT16	1	At stop
P0803	Runaway speed threshold	rpm	0~10000	UINT16	0	Immediate
P0808	Clear action	-	0- Clear position deviation upon SOFF 1- Clear position deviation upon SOFF and Clear position deviation by ClrPosErr signal input from DI	UINT16	0	At stop
P	Runaway	-	0- Disabled	UI	1	Immedi

Param.	Name	Unit	Value	Data Type	Default	Change
0809	protection		1- Enabled	NT16		ate
P0810	Runaway current threshold	0.1%	1000~4000	UINT16	2000	Immediate
P0811	Runaway speed threshold	rpm	1~1000	UINT16	10	Immediate
P0812	Runaway Speed feedback filtering time	0.1ms	1~1000	UINT16	20	Immediate
P0813	Runaway protection detection time	ms	10~1000	UINT16	30	Immediate
P0814	Motor overload protection gain	%	50~300	UINT16	100	At stop
P0816	Motor overload detection	-	0- Disabled 1- Enabled	UINT16	1	At stop
P0817	Motor stall detection	-	0- Disabled 1- Enabled		1	Immediate
P0818	Motor stall overtemperature protection time	ms	10~65535	UINT16	200	Immediate
P0821	Over temperature threshold	°C	0~100	UINT16	0	At stop
09 Display Parameters						
P0900	Position speed reference	rpm	-32767~32767	INT16	0	Unchangeable
P0901	Speed reference	rpm	-32767~32767	INT16	0	Unchangeable
P0902	torque reference	0.1%	-32767~32767	INT16	0	Unchangeable
P0903	Motor speed feedback	rpm	-32767~32767	INT16	0	Unchangeable
P0904	speed actual value	rpm	-32767~32767	INT16	0	Unchangeable
P0906	speed actual value (0.1rpm)	rpm	-2147483648~2147483647	INT32	0	Unchangeable
P0910	Bus voltage	0.1V	0~65535	UINT16	0	Unchangeable
P0911	Ctr voltage	0.1V	0~65535	UINT16	0	Unchangeable
P0912	RMS value of phase current (U)	0.01A	0~65535	UINT16	0	Unchangeable
P0913	RMS value of line voltage	0.1V	0~65535	UINT16	0	Unchangeable
P0914	Average load rate	0.1%	0~8000	UINT16	0	Unchangeable
P0915	temperature	°C	0~65535	UINT16	0	Unchangeable
P0917	Electrical angle	0.1°	0~65535	UINT16	0	Unchangeable
P0918	Monitored DI status	-	0~65535	UINT16	0	Unchangeable

Param.	Name	Unit	Value	Data Type	Default	Change
P0920	Monitored DO status	-	0~65535	UINT16	0	Unchangeable
P0922	value of AI1 voltage	V	-32767~32767	INT16	0	Unchangeable
P0923	value of AI2 voltage	V	-32767~32767	INT16	0	Unchangeable
P0925	Total power-on time	0.1s	0~4294967295	UINT32	0	Unchangeable
P0927	Current power on time	-	0~4294967295	UINT32	0	Unchangeable
P0930	Input position reference counter	Reference unit	-2147483648~2147483647	INT32	0	Unchangeable
P0932	Position reference counter	Reference unit	-2147483648~2147483647	INT32	0	Unchangeable
P0934	Position feedback counter	Reference unit	-2147483648~2147483647	INT32	0	Unchangeable
P0936	Encoder Position feedback counter	Encoder unit	-2147483648~2147483647	INT32	0	Unchangeable
P0938	position deviation counter	Reference unit	-2147483648~2147483647	INT32	0	Unchangeable
P0940	Encoder position deviation counter	Encoder unit	-2147483648~2147483647	INT32	0	Unchangeable
P0942	Number of revolutions recorded in the absolute encoder	Reference unit	0~65535	UINT16	0	Unchangeable
P0943	Single-turn position fed back by the absolute encode	p	0~2147483647	UINT32	0	Unchangeable
P0945	Absolute position fed back by the absolute encoder (low 32 bits)	Encoder unit	-2147483648~2147483647	INT32	0	Unchangeable
P0947	Absolute position fed back by the absolute encoder (high 32 bits)	Encoder unit	-2147483648~2147483647	INT32	0	Unchangeable
P0949	Mechanical absolute position (low 32 bits)	Encoder unit	-2147483648~2147483647	INT32	0	Unchangeable

Param.	Name	Unit	Value	Data Type	Default	Change
P0951	Mechanical absolute position (high 32 bits)	Encoder unit	-2147483648~2147483647	INT32	0	Unchangeable
P0953	Load position within one turn in absolute position rotation mode (low 32 bits)	Encoder unit	0~4294967295	UINT32	0	Unchangeable
P0955	Load position within one turn in absolute position rotation mode (high 32 bits)	Encoder unit	0~4294967295	UINT32	0	Unchangeable
P0957	Load position within one turn in absolute position rotation mode	Reference unit	0~4294967295	UINT32	0	Unchangeable
0A Communication Parameters						
P0A00	Drive axis address	-	1~247	UINT16	1	Immediate
P0A02	Serial baud rate	-	0-2400bps	UINT16	6	Immediate
			1-4800bps			
			2-9600bps			
			3-19200bps			
			4-38400bps			
			5-57600bps			
			6-115200bps	UINT32		
P0A03	Modbus data format	-	0- No parity, 2 stop bits（8-N-2）	UINT16	0	Immediate
			1- Even parity, 1 stop bit（8-E-1）			
			2- Odd parity, 1 stop bit（8-O-1）			
			3- No parity, 1 stop bit（8-N-1）			

7 appendix

7.1 DIDO function definition

Function number	Function name	description
Input signal function description		
1	Servo enabling	Effective-servo motor Invalid-Servo motor enable prohibited
2	emergency shut down	Effective-Position lock after zero-speed shutdown; Invalid-No effect on the current running status.
3	Directive prohibited	Valid-Proposition position instruction entry Invalid-Alposition position instruction allowed
4	Location deviation clearance (Along the active functions)	Effective-position deviation zero zero; Invalid-Position deviation not zero.
5	Fault reset (Edge edge function)	invalid-prohibited; Effective-enabling.
6	Zero speed to maintain	Effective-enable the zero-bit fixed function; Invalid-prohibit zero fixation function.
7	Forward point move	Effective-Enter as per the given instruction; Invalid-Run the instruction to stop the input.
8	Reverse point movement	Effective-Reverse input per given instruction; Invalid-Run the instruction to stop the input.
9	Forward limit	Effective-No positive drive; Invalid-Allow a positive drive.
10	Reverse limit	Effective-prohibit reverse drive; Invalid-Allow the reverse drive.
11	Origin switch	Invalid-It is not triggered. Effective-Trigger.
12	Back to zero enabling	invalid-prohibited Effective-enabling
13	Speed limit selection	Valid-absolute value of torque instruction reaches set value-absolute value of torque instruction is less than the set value
14	Forward torque limit selection	Switch the torque limiting source according to the 2015-04h selection.

Function number	Function name	description
15	Reverse-torque limit selection	Switch the torque limiting source according to the 2015-04h selection.
16	Preset position enabling	Effective-servo motor running multistage position command; Invalid-Servo motor is in a locked state;
19	Torque instruction direction switch	Invalid-Positive direction; Effective — reverse direction.
20	Speed instruction direction selection	Invalid-Positive direction; Effective — reverse direction.
22	Gain switch selection	◆ Time of 2008-09h=0: Invalid-The speed control loop is the PI control; Effective-Speed control ring is P control. ◆ At 2008-09h =1: Follow the setting of 2008-0Ah.
23	Run instruction switch	Invalid-current running instruction is A valid-current running instruction is B
24	Mode switch 1	According to the selected control mode (3,4,5), the speed, position, and torque mode are switched
25	Mode switch 2	According to the selected control mode (6), the switch between speed, position and torque mode is performed
26	Electronic gear switch	Invalid-electronic gear ratio 1 Effective-electronic gear ratio 2
27	Preset instruction select 1	The 1 6-paragraph preset instruction selection
28	Preset instruction selection 2	The 1 6-paragraph preset instruction selection
29	Preset command selection 3	The 1 6-paragraph preset instruction selection
30	Preset instruction selection 4	The 1 6-paragraph preset instruction selection.
31	Take the current DI trigger point as the origin	Effective: trigger Invalid: No trigger

Function number	Function name	description
Functional description of the output signal		
1	Servo-ready (rdy)	The servo state is ready to receive the S-ON valid signal: Effective-Servo-ready; Invalid-Servo is not ready. (Servo not ready: servo type I or II failure, or DI emergency shutdown is valid.)
2	Servo Run (Run)	The servo is currently in the RUN state and can receive commands: Effective-Servo can be run; Invalid-Servo cannot be run.
3	Servo warning output (Warner)	The warning output signal is valid.(breakover)
4	Servo Fault Output (Error)	Status is valid when a fault is detected.
5	Motor motion (TGon)	When the speed of the servo motor is above the speed threshold of 2006-11h: Effective-effective motor movement signal; Invalid-invalid motor motion signal.
6	Zero-speed signal (Zero)	Output signal when the servo motor stops turning Effective-Motor speed is zero; Invalid-The motor speed is not zero.
7	Speed is consistent (VCmp)	During speed control, the absolute value of the difference between servo motor speed and speed command is less than 606 Dh speed reaches the threshold, and the time meets 606 Eh, which is valid.
8	Speed to reach (VArr)	Effective-speed feedback reaches the set point; Invalid-Speed feedback does not reach the setpoint.
9	Torque arrival (TArr)	Effective-absolute torque reaches set point; Invalid-The torque absolute value is less than the reach setpoint.
10	Positioning proximity (Near)	During position control, the position deviation pulse is valid for the positioning signal amplitude P13.09.
11	Location arrived (Coin)	During position control, the position deviation pulse reached the localization threshold of 6067h, and the time reached 6068h, effective.
12	Torque Limits (Clt)	Validation signal for torque limits: Effective-the motor torque is limited; Invalid-unrestricted motor torque.

Function number	Function name	description
13	Speed Limit (Vlt)	Validation signal for speed limitation during torque control: Effective-limited motor speed; Invalid-Motor speed is unrestricted.
14	Return to Zero to Complete (HomeOK)	Effective-origin back to zero completed; Invalid-origin zero not completed;
17	Holding control (BK)	Holding lock signal output: Effective-close, unlock; Invalid-Start the lock.
18	Dynamic braking (DB)	Effective-Dynamic brake relay is disconnected, and the dynamic brake is effective; Invalid-the dynamic brake relay suction, the dynamic brake is invalid;
19	Completion of magnetic pole identification (AngRdy)	Effective-magnetic pole identification is completed; Invalid-the magnetic pole recognition bit is completed;

7.2 The SDO transmission stop code

When the communication or drive is abnormal, the server drive sends an emergency message to the network as a producer, or sends an aborted response when the SDO transmission is abnormal. There are 4 Byte abort codes in the SDO abort response data representing different termination reasons, as shown in the following table:

Stop the code	functional description	Stop the code	functional description
0x05 03 00 00	No change during segment transfer	0x06 07 00 12	Data type does not match, and the service parameter length is too long
0x05 04 00 00	SDO transmission timeout	0x06 07 00 13	The data type does not match, and the service parameter length is too short
0x05 04 00 01	The command code is invalid or unknown	0x06 09 00 11	The subindex does not exist
0x05 04 00 05	Memory overflow	0x06 09 00 30	Write data is out of range
0x06 01 00 00	Objects are not supported for access	0x06 09 00 31	Write data value is too large
0x06 01 00 01	Read one of a write-only data object	0x06 09 00 32	Write data value is too small
0x06 01 00 02	Ttempting to write read-only objects	0x06 09 00 36	The maximum value is less than the minimum value
0x06 02 00 00	Data objects do not exist in the data dictionary	0x08 00 00 00	Ordinary mistakes
0x06 04 00 41	Object cannot be mapped to a PDO	0x08 00 00 20	Data cannot be transferred or saved to the application
0x06 04 00 42	The number and length of the mapped objects exceeds the PDO length	0x08 00 00 21	The data cannot be transferred or saved to the application due to the local control

7.3 Adapt to the TwinCAT operation instructions

7.3.1 TwinCAT Point run

TwinCAT is a PC-based control software that transforms control functions from hardware to software modules and integrates PLC, motion control and CNC into one PC software solution. This section will use TwinCAT3 to run the HR3 series servo.

TwinCAT3-Nc axis debugging interface point movement operation

A） Place the EtherCAT description file (HR3-Ecat_v1.0.5xml) under path C: \ TwinCAT \ 3.1 \ Config \ Io \ EtherCAT;

B） Open the TwinCAT3 software;

C） Install the network card driver:

I) As shown in the figure below, click the TwinCAT option in the menu bar and select Show Realtime EtherCAT Compatible Decives in the drop-down list

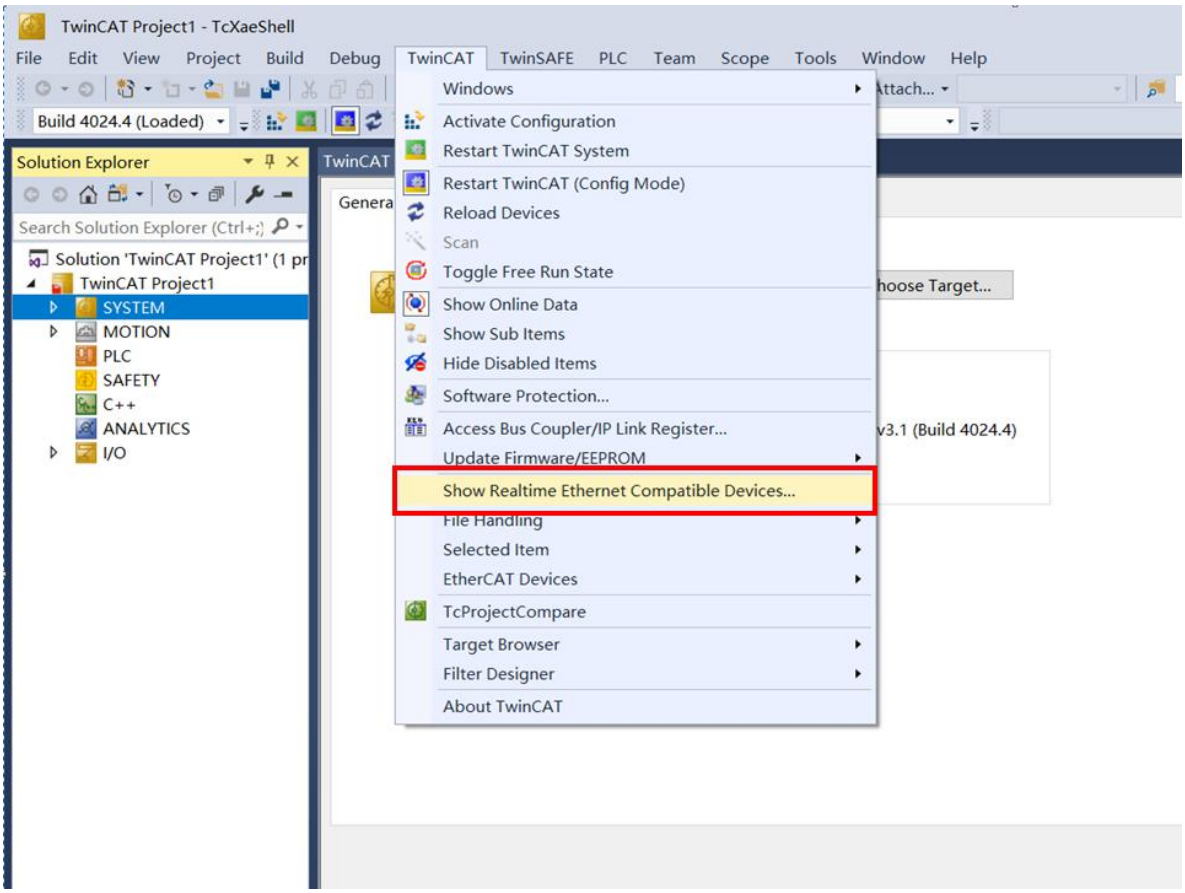

Figure 7-1 Open the network card drive installation

II) The popup is shown below: Select the local connection under Incompatible devices, then click Install to install the network card, and click Enable.

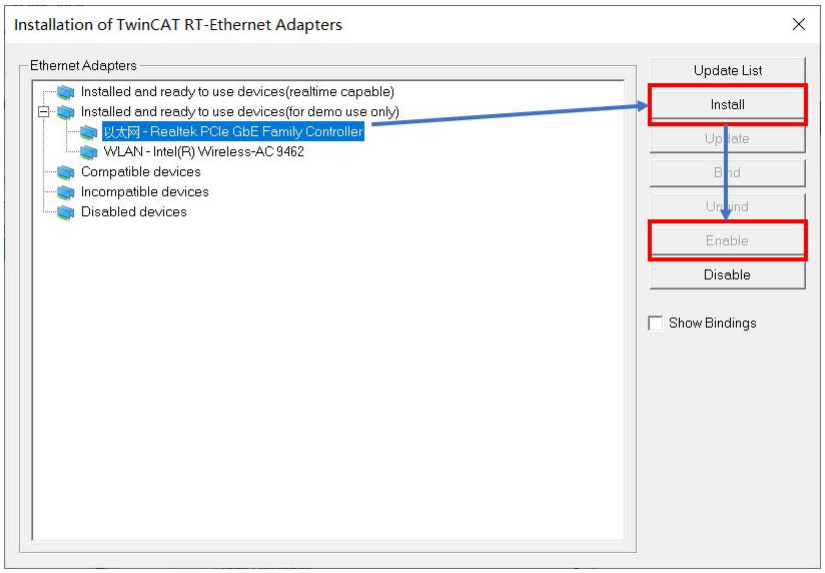

Figure 7-2 Network card driver installation interface

D） New TwinCAT3 project

I) As shown in the figure below, there are two ways to create TwinCAT3 projects:

Method 1: Click File-New-Project in the menu bar,

Method 2: Click on the intermediate view window of the software and click on New TwniCAT Project.

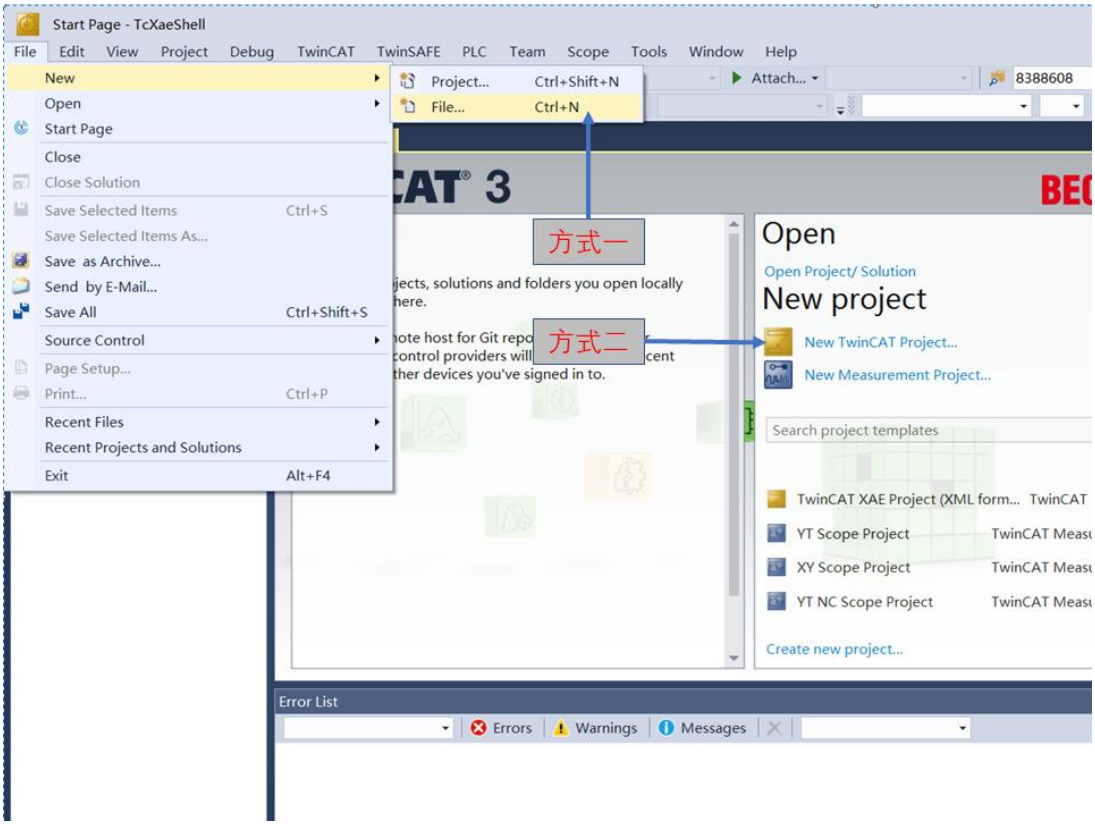

Figure 7-3 New TwinCAT3 project

II) The following popup appears, select TwinCAT XAE Project (XML format), enter the project name, select the project path, and click OK

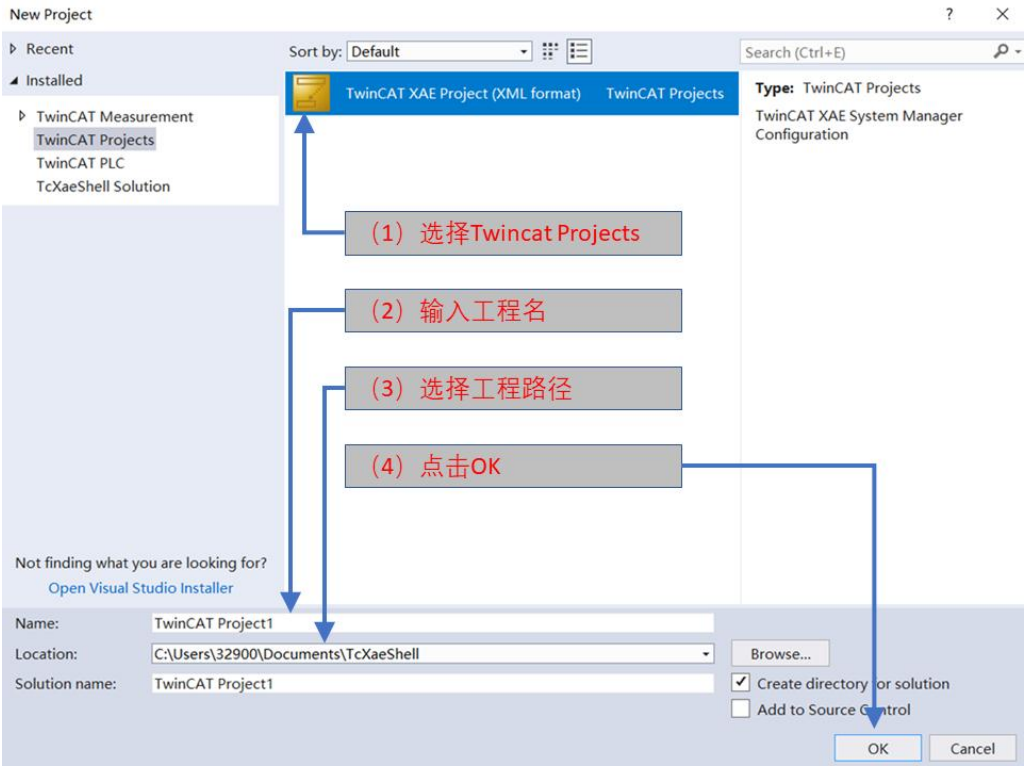

Figure 7-4 TwinCAT Create a new project interface

E） Switch the TwinCAT3 to the Config mode

As shown below, click on the Config mode button.(Note: If the Activate Configuration, Restart TwinCAT System and Config Mode of the menu bar are gray unselectable, you can select the System option in the list by clicking the TwinCAT icon in the lower right corner of the PC, and then click Config to switch the TwinCAT3 running state.)

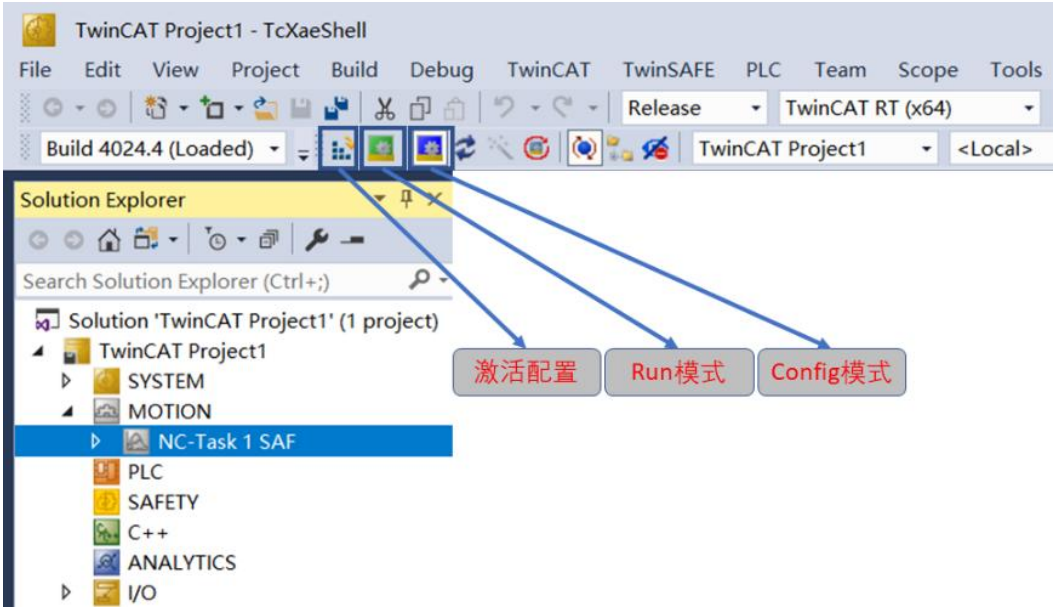

Figure 7-5 TwinCAT3 Toolbar

F） Scan servo device, and add the NC axis

I) In the left tree list, expand the I / O node, right-click Devices, click Scan, click OK in the pop-up prompt window, then pop new I / O devices found window, which lists the scanned EtherCAT device, check the servo device (servo device is generally Devices * (EtherCAT)), and click OK.

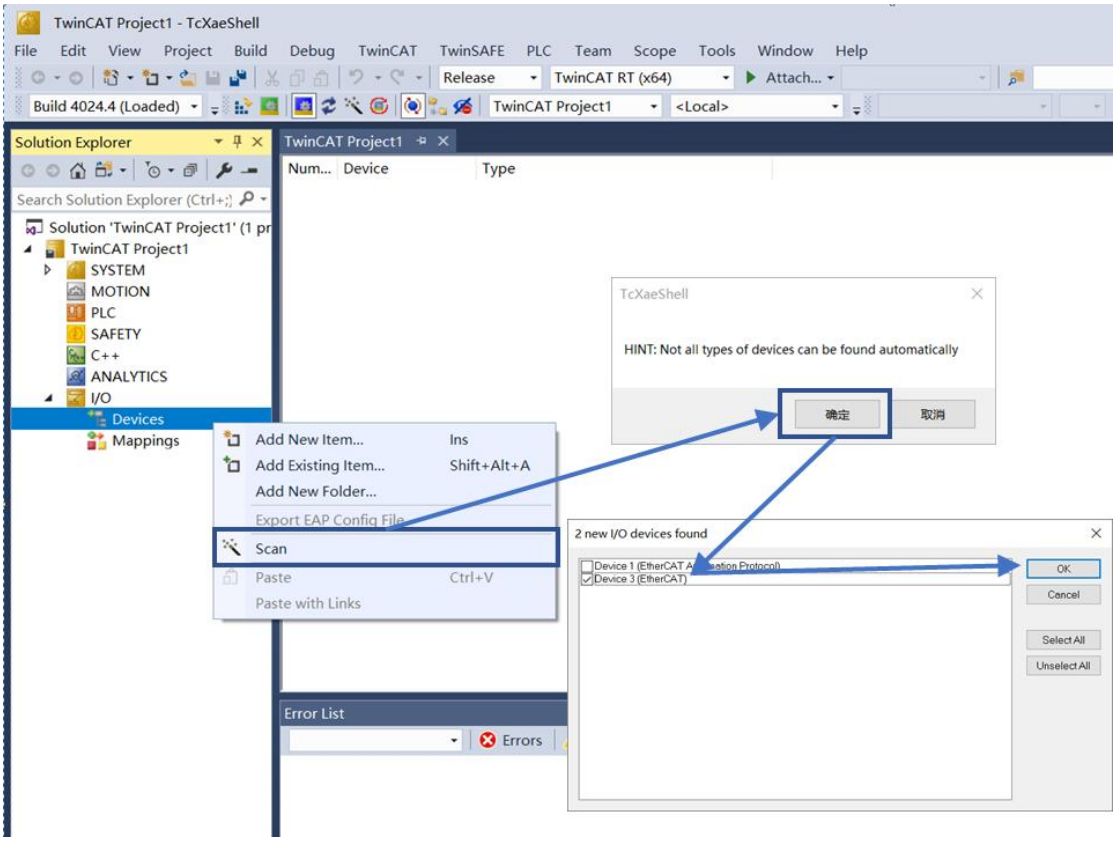

Figure 7-6 TwinCAT3 Scan the device

II) Pop up query pop up, as shown in the figure below, click Yes

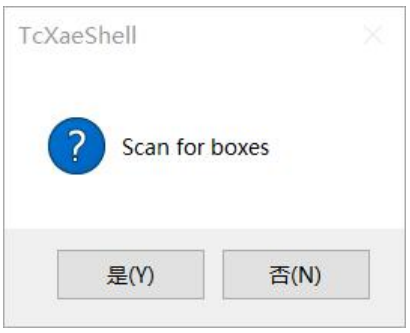

Figure 7-7 ScanBox Popovers

III) Pop up, as shown in the figure below, click OK

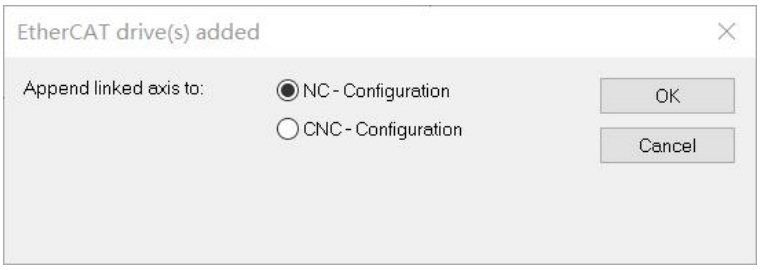

Figure 7-8 Add the NC shaft popups

IV) Pop up, as shown in the figure below, click No

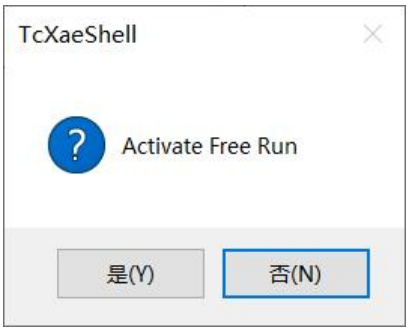

Figure 7-9 Whether to switch the Free Run popover

G） Configure the NC-axis parameters

PLC axis-NC axis-physical axis, each axis has the control variable output and state variable input, PLC axis is the axis of program control in PLC, NC axis is the CNC axis of directly controlling the physical axis, the physical axis is scanned to the actual axis.

I) Link the NC axis to the physical axis, without creating the PLC axis, as shown in the figure below (scan the device with a pop-up asking whether the link to the NC axis or CNC axis, if you click Yes, the NC axis will automatically link).

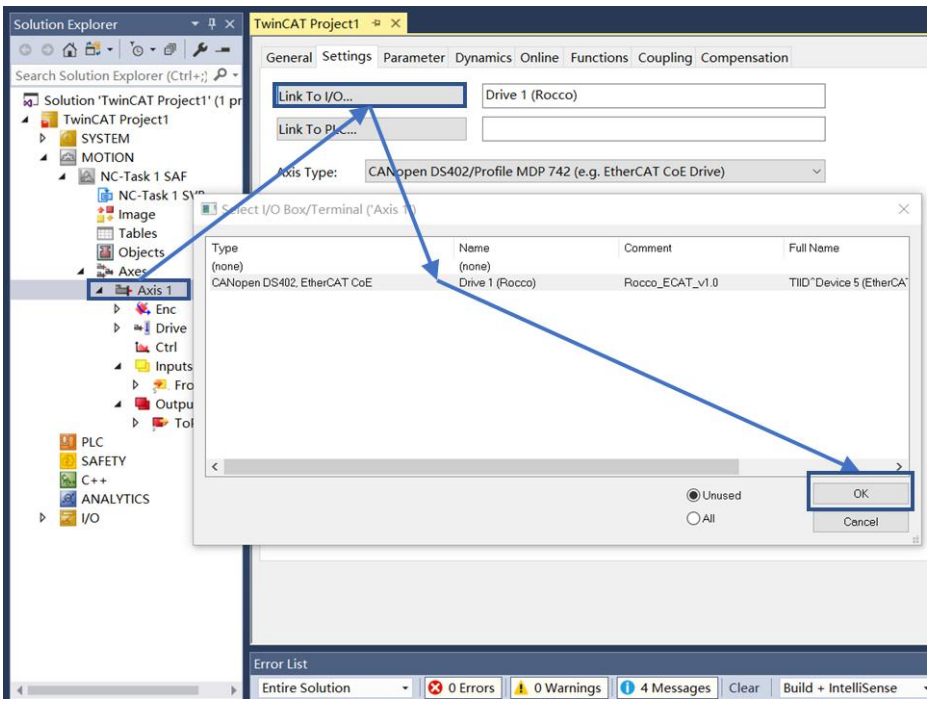

Figure 7-10 Link the NC axis with the physical axis

II) Modify the NC axis Enc parameters, click the Enc node and the Parameter tab in the view in the middle of the software to find the following two parameters under Encoder Evaluation:

Scaling Factor Number: Electronic gear ratio molecule- -motor rotation of a circle of NC axis movement, in this input 60, that is, the motor rotation of a circle, NC axis movement of 60mm.

Scaling Factor Denominator (default: 1.0): Electronic gear ratio parent- -motor encoder resolution,

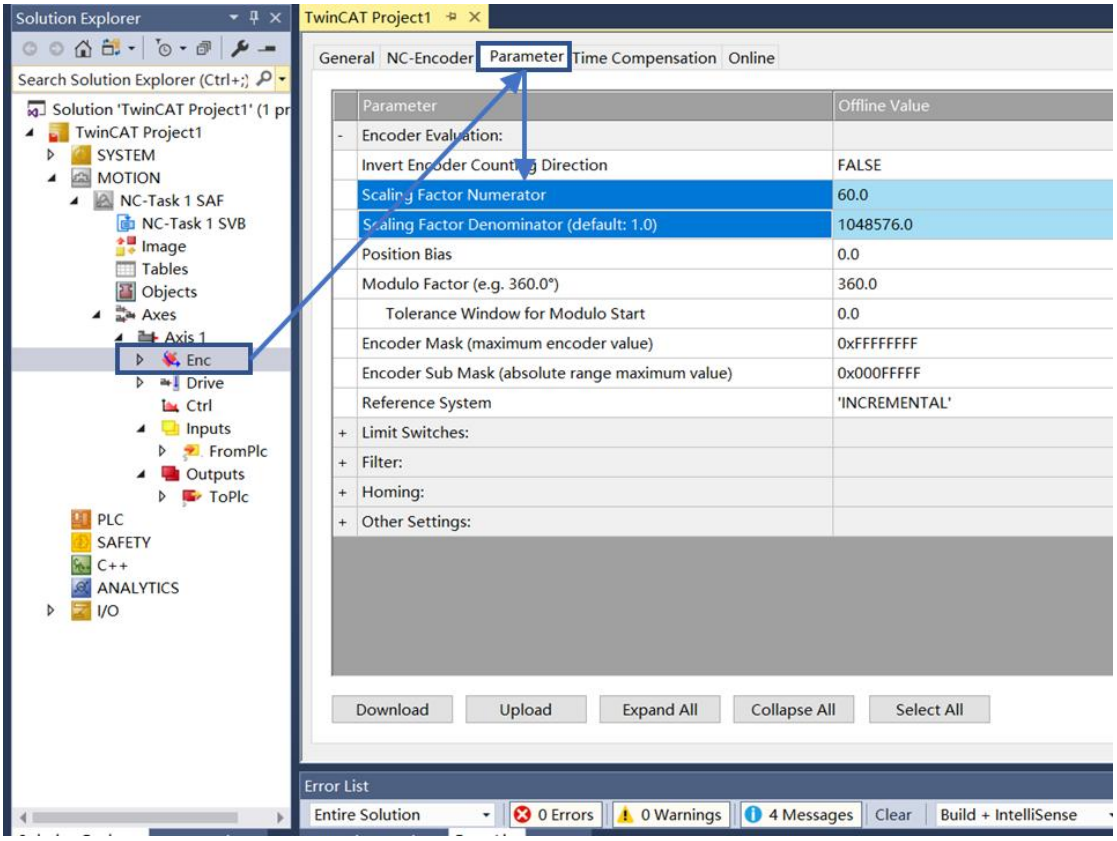

Figure 7-11 Modify the NC shaft electronic gear ratio

III) Modify the Axis parameter, click the Axis 1 node in the left tree list, click the Parameter tab in the view expanded in the middle of the software, find the following five parameters under Manual Motion and Homing and Monitoring and set the following values:

- Manual Velocity (Fast): High-speed JOG speed- -600mm / s
- Manual Velocity (Slow): Low-speed JOG speed- -60mm / s
- Position Lag Monitoring: Position lag monitoring- -FALSE
- Position Range Monitoring: Position range monitoring- -FALSE
- Target Poistion Monitoring: Target location monitoring- -FALSE

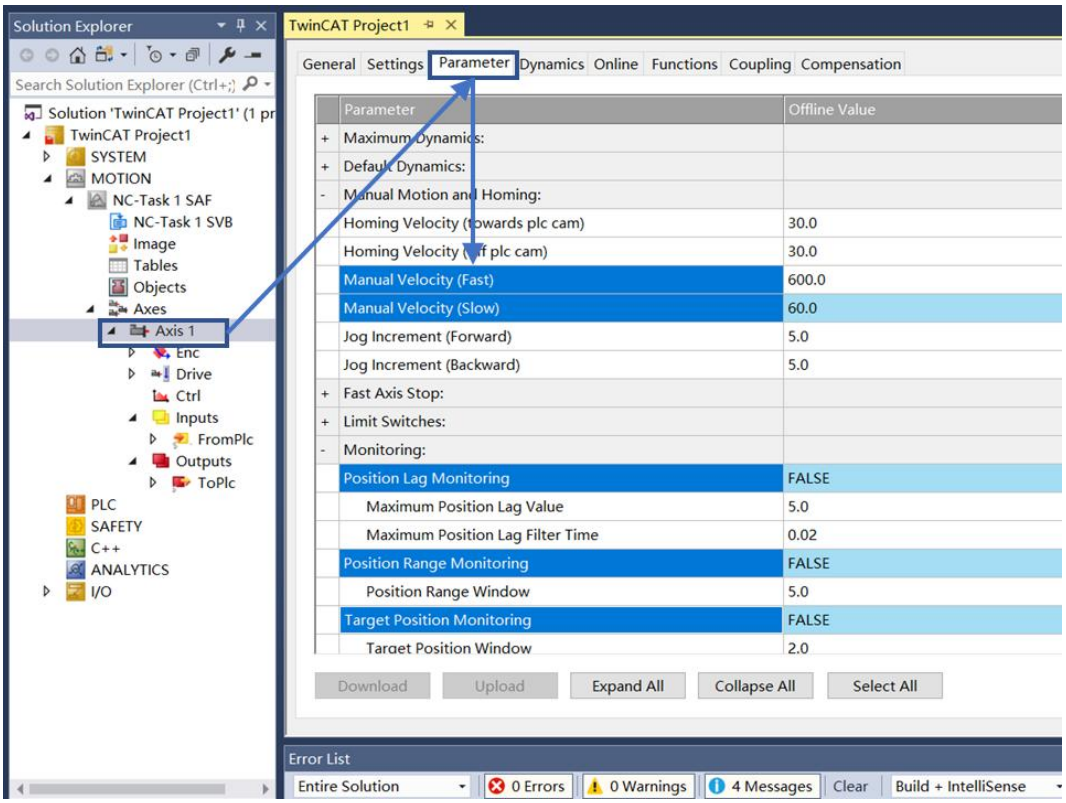

Figure 7-12 NC axis point moving high speed and low speed setting

H） Activate configuration

Click Activate Configuration, in the pop-up window, click OK, pop up again, click OK, enter Run Mode

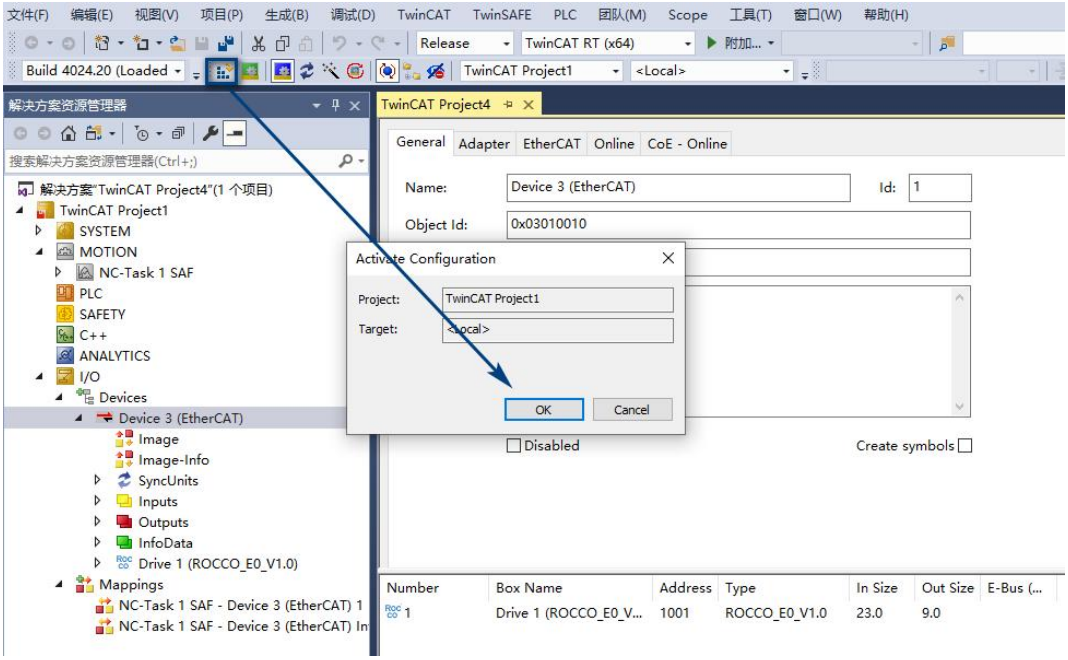

Figure 7-13 Activate the configuration and switch the status to Run mode

I） TwinCAT3 JOG for the servo equipment

I) Select the Axis 1 node in the left tree list, and click the Online tab in the central view window of the software;

II) Click the Set button, pop up the Set Enabling popup window, click All, and then click OK;

III) At this time, the Ready check box under State (log.) should be checked, (if not, check whether the servo makes an error and clear the NC axis error in TwinCAT3);

IV) Click F1-F4 arbitrarily for the JOG of the servo equipment.

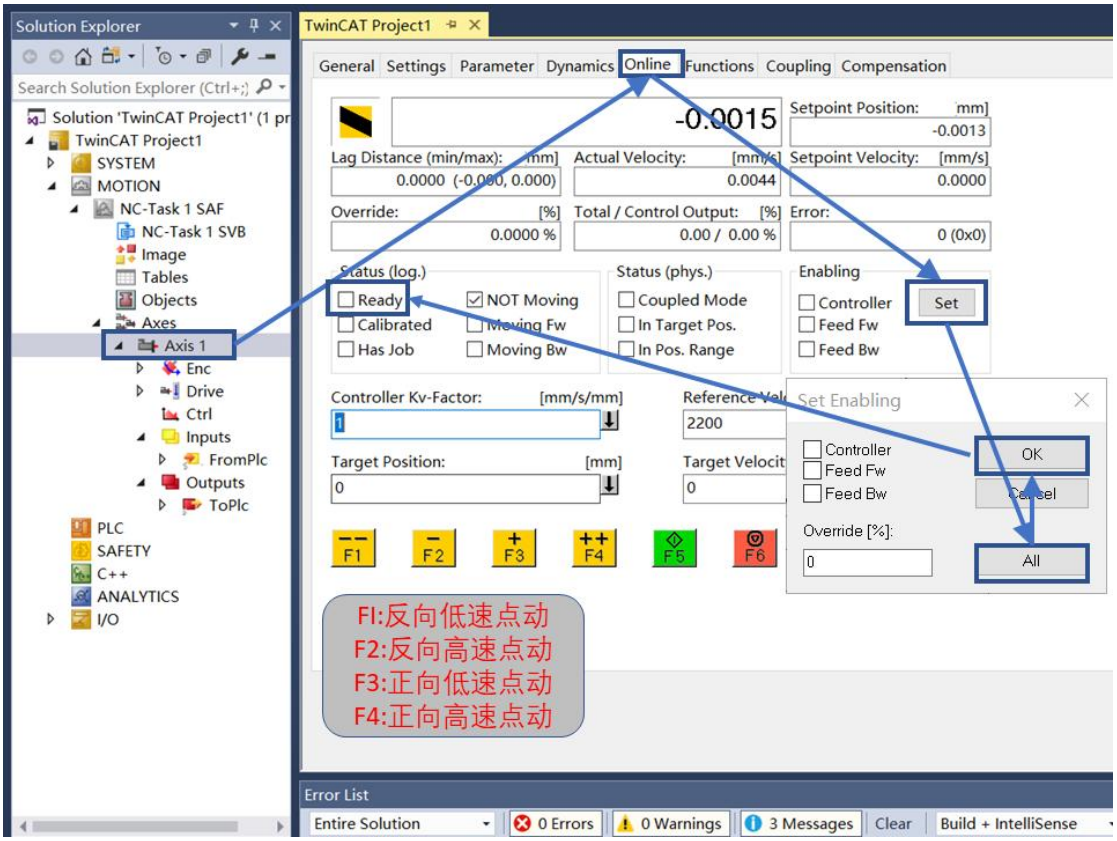

Figure 7-14 NC axis point movement

J） TwinCAT3 Simple motion of the servo equipment

As shown in the figure below, select the Axis 1 node in the tree list on the left, select the Functions tab in the middle view of the software, and select the operation mode in the Start Mode to make different forms of motion of the servo device.

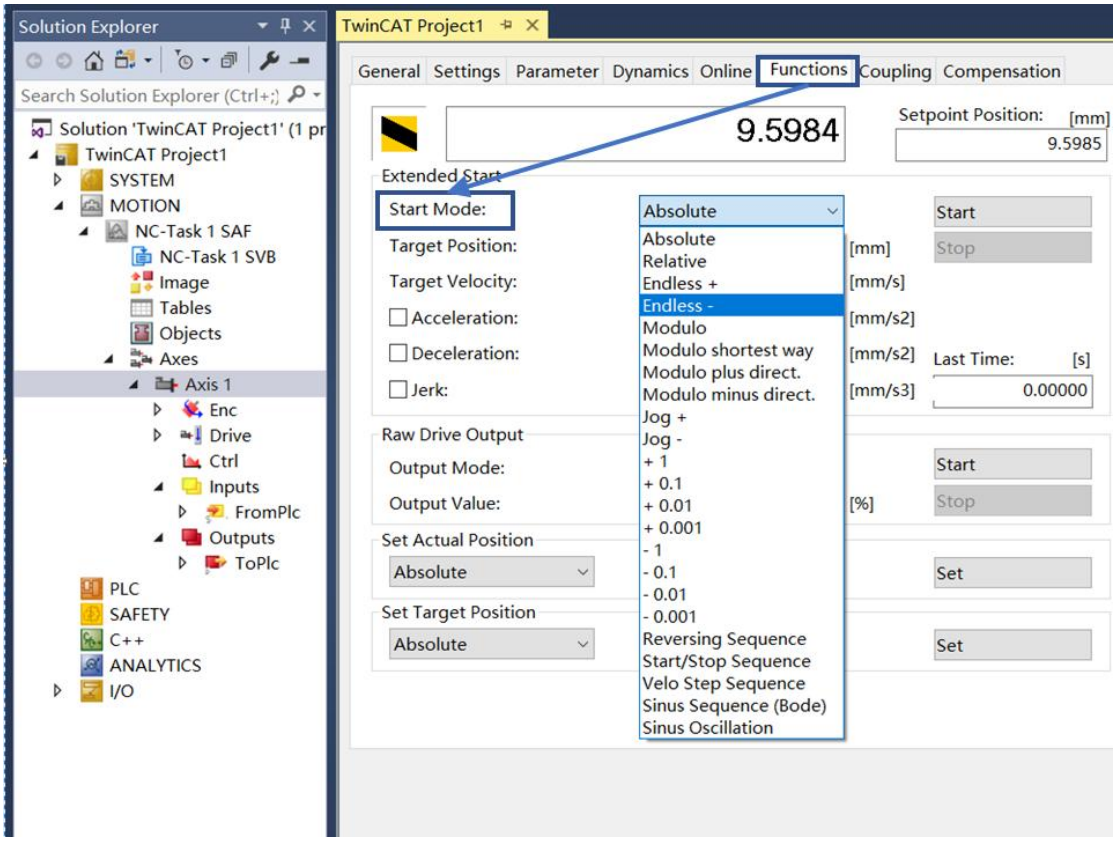

Figure 7-15 The NC axis composite motion

7.3.2 TwinCAT3-PDO control operation

(7) Changes to the PDO mapping object

Application objects and PDO allocation objects in PDO variable mapping objects can be changed through the upper computer software. The specific steps are as follows:

A） TwinCAT3 Modify the transmit PDO Maooing: as shown in the figure below

I) Click the scanned servo device in the left tree list, and click Process Data in the middle view of the software;

II) Click on SM2 under Sync Manager;

III) Under PDO Assignment (0x1C12), uncheck 0x1701 and then check 0x1600;

IV) Click on 0x1600 in the Index column of the PDO List;

V) Click the right mouse button in PDO Content (0x1600), delete the existing PDO through Delete, and increase the PDO through Add new Item.

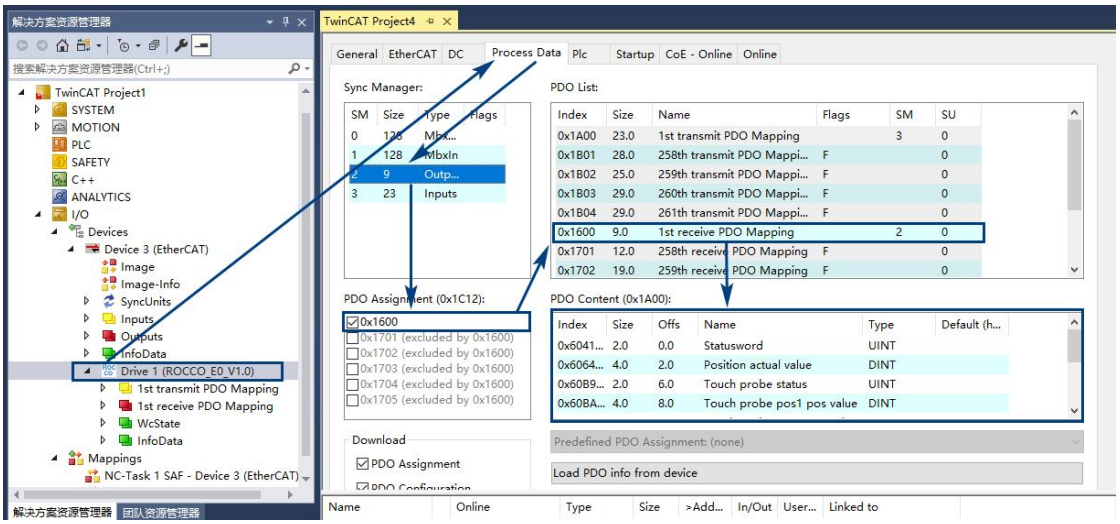

Figure 7-16 TwinCAT3 Modify the RPDO mapping list

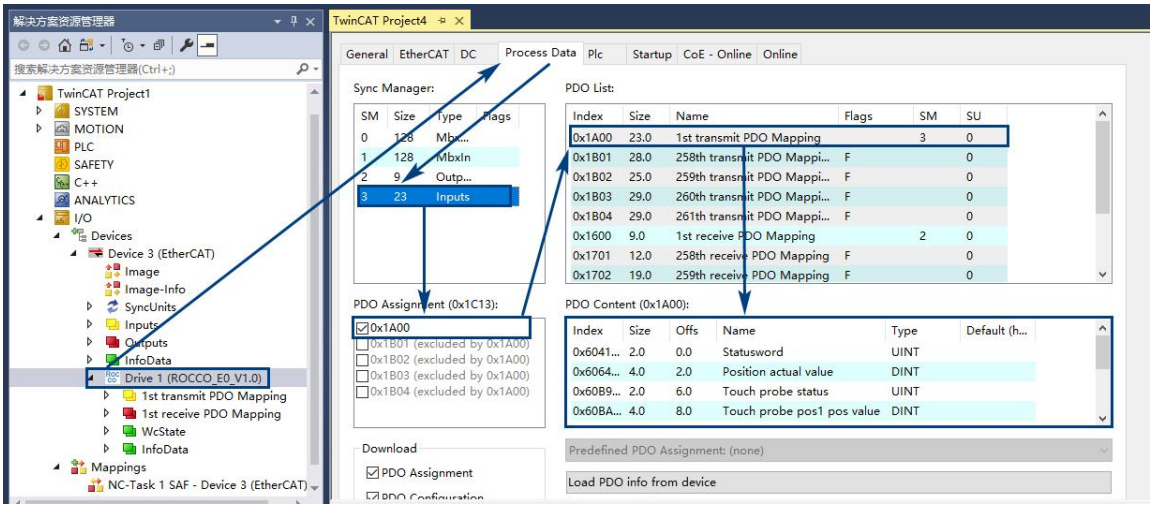

Figure 7-17 TwinCAT3 Modify the TPDO list

B）TwinCAT3 Modify the transmit PDO Maooing: as shown in the figure below

I) Click the scanned servo device in the left tree list, and click Process Data in the middle view of the software;

II) Click on SM3 under Sync Manager;

III) Under PDO Assignment (0x1B01), uncheck 0x1701 and then check 0x1A00;

IV) Click on 0x1A00 in the Index column of the PDO List;

V) Click the right mouse button in PDO Content (0x1A00), delete the existing PDO through Delete, and add the PDO through Add new Item.

(8) PDO assignment

Switch the TwinCAT3 state to Config mode, select NC axis in the left tree list, under the Setting

interface, click Link To I / O, popup, select none, click OK, then disconnect the variable link between NC axis and the servo drive device.

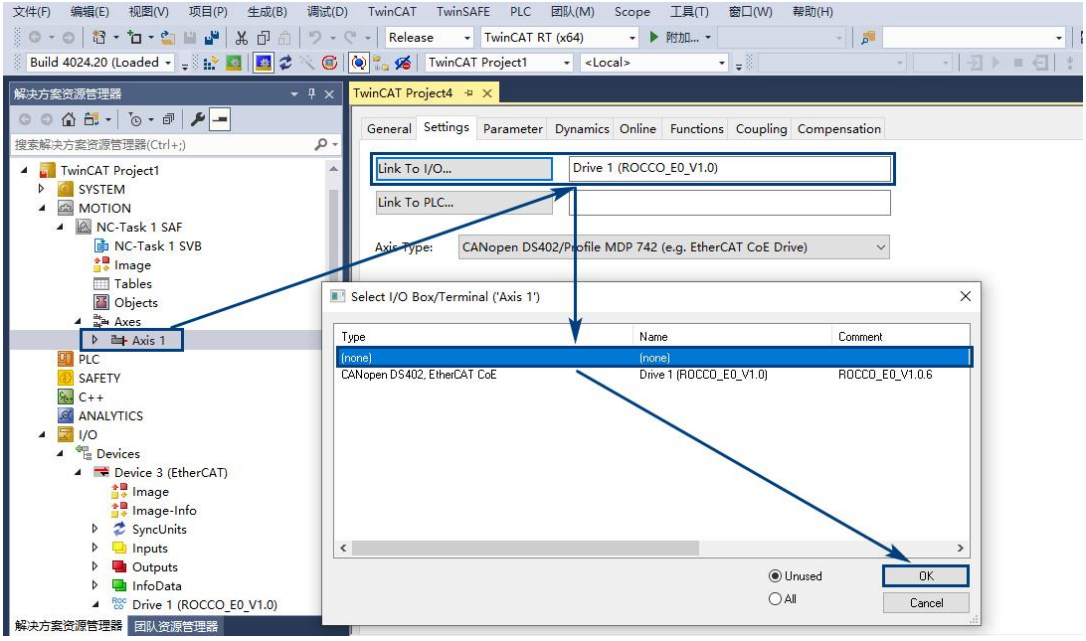

Figure 7-18 Unlink the NC axis from the physical axis

After unlinking the PDO with the NC axis variables, click the servo drive PDO list, and all the Link to of the coping objects are empty reactivated configuration.

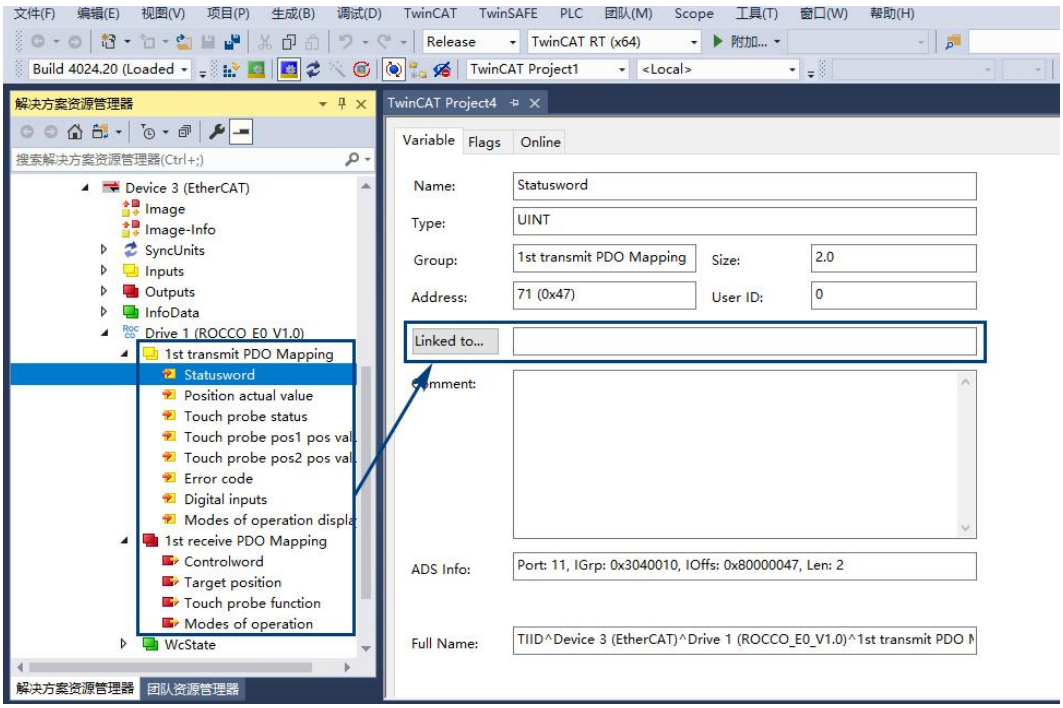

Figure 7-19 Physical axis variable link interface

A) Double-click Controlword in the PDO list, click Online in the middle view box of the software, click the following figure, then the control word assignment is successful.

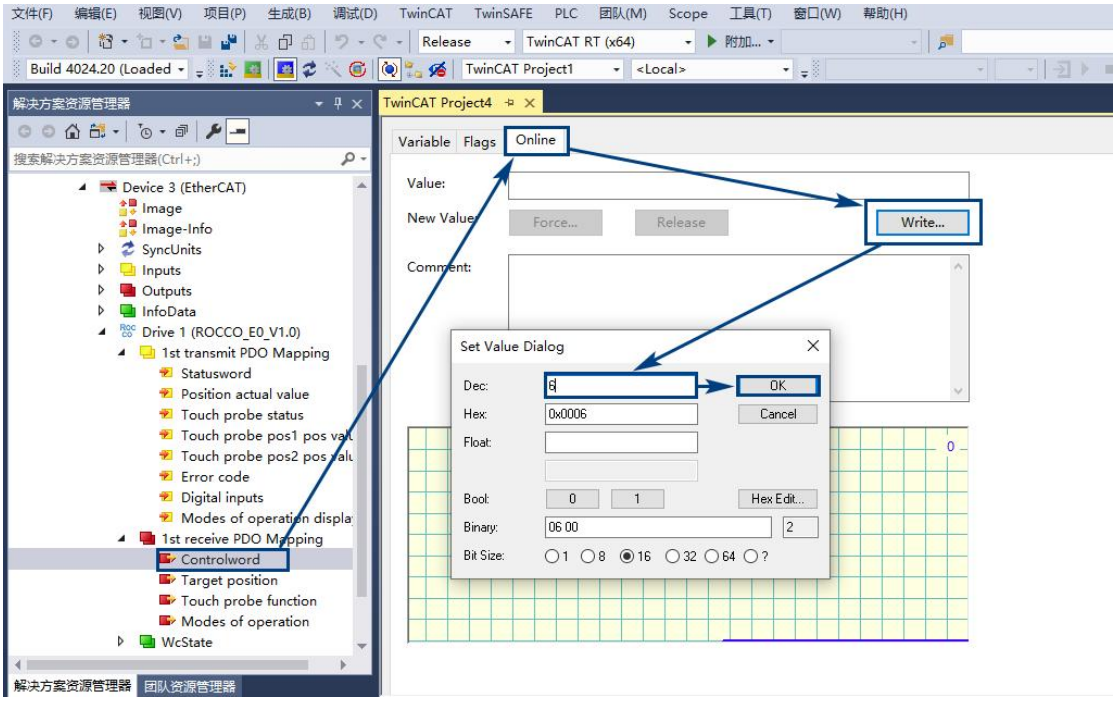

Figure 7-20 RPDO assignment